EMC - PARTNER

IMU USER GUIDE

COMPLETE CALIBRATION AND TEST SETUP DIAGRAMS

CONGRATULATIONS FOR
PURCHASING AN IMU3000 GENERATOR !

EXCELLENCE IS AN ATTITUDE

EMC - PARTNER

20 YEARS

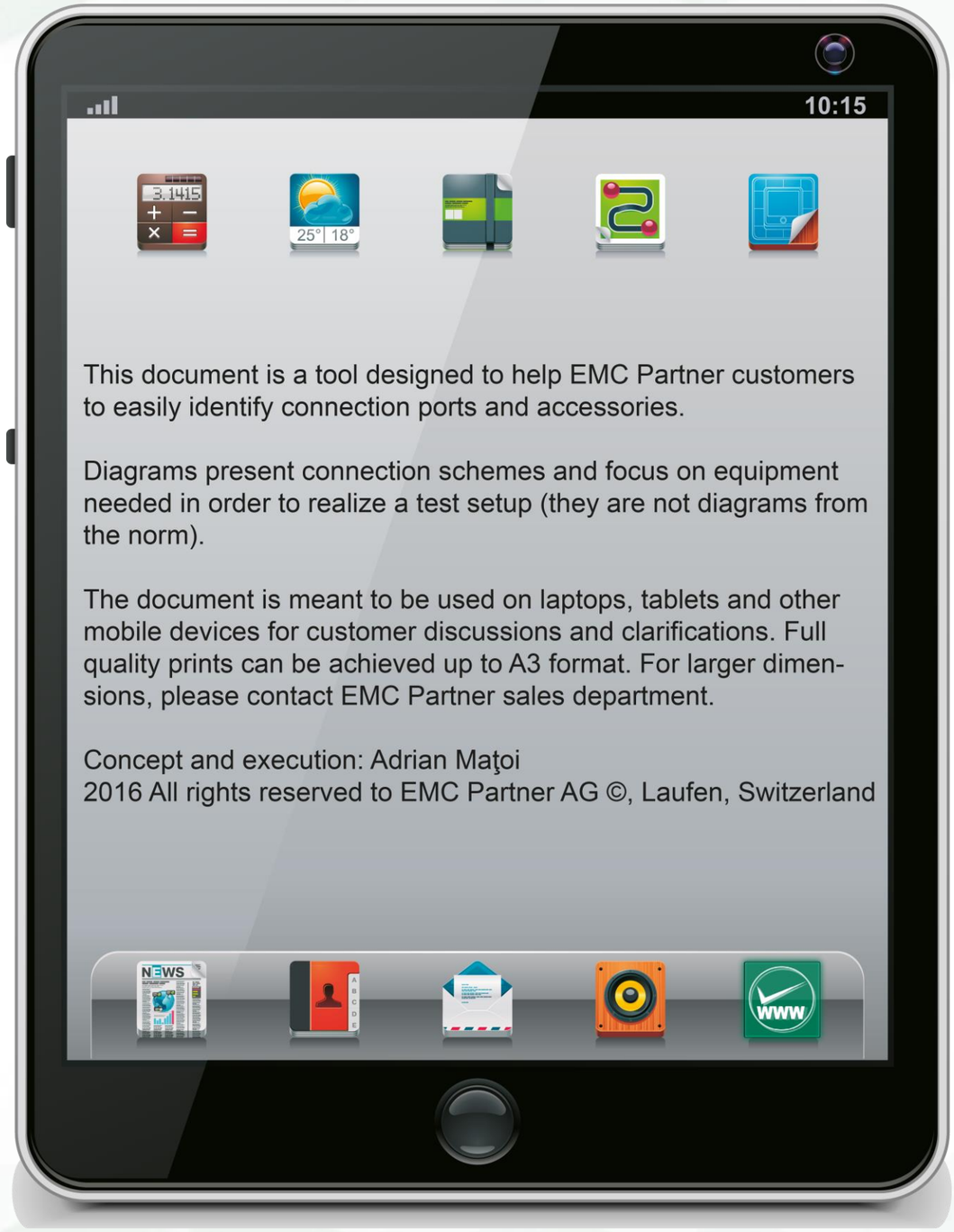

This document is a tool designed to help EMC Partner customers to easily identify connection ports and accessories.

Diagrams present connection schemes and focus on equipment needed in order to realize a test setup (they are not diagrams from the norm).

The document is meant to be used on laptops, tablets and other mobile devices for customer discussions and clarifications. Full quality prints can be achieved up to A3 format. For larger dimensions, please contact EMC Partner sales department.

Concept and execution: Adrian Maţoi

2016 All rights reserved to EMC Partner AG ©, Laufen, Switzerland

Legend

In most of the diagrams referring to calibration, an oscilloscope is present. EMCP does not sell oscilloscopes, but can indicate the minimum required bandwidth according to application, see table below. Same bandwidth requirements apply for probes used in combination with the oscilloscope.

Standard	Minimum bandwidth for osc.
IEC 61000-4-2	2 GHz
IEC 61000-4-4	400 MHz
IEC 61000-4-5	10 MHz
IEC 61000-4-8	10 kHz
IEC 61000-4-9	10 MHz
IEC 61000-4-11	10 MHz
IEC 61000-4-12	20 MHz
IEC 61000-4-16	10 MHz
IEC 61000-4-19	10 MHz
IEC 61000-4-29	10 MHz
IEC 61000-4-34	10 MHz

Following conventions are used in the guide:

Equipment Under Test, could be single phase, three phase (when marked) or equipped with I/O ports

Auxiliary Equipment, could be single phase, three phase (when marked) or equipped with I/O ports

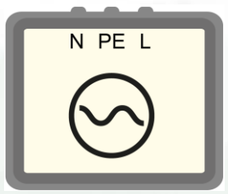

AC power source: could be grid connection or dedicated power source, one phase or three phase (when marked)

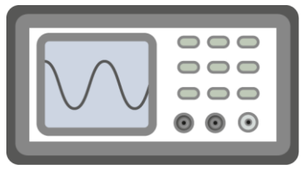

Oscilloscope

Current probes

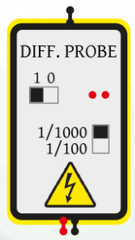

Voltage differential probe

Index

1. IMU3000 and accessories 8
1.1. ESD calibration and test setup as per IEC 61000-4-2 latest edition 9
1.1.1. ESD: IMU3000, EXT-TRA3000 E, calibration setup – current 10
1.1.2. ESD: IMU3000, EXT-TRA3000 E, *optional* verification setup – voltage 12
1.1.3. ESD: IMU3000, EXT-TRA3000 E, ESD-STAND Ed2, *optional* stand for fixed point tests 14
1.1.4. ESD: IMU3000, EXT-TRA3000 E, test setup direct discharge 16
1.1.5. ESD: IMU3000, EXT-TRA3000 E, test setup indirect discharge 18
1.2. EFT/Burst calibration and test setup as per IEC 61000-4-4 latest edition 20
1.2.1. EFT: IMU3000 F5/F6, direct output, calibration setup with VERI1K EFT 21
1.2.2. EFT: IMU3000 F5/F6, direct output, calibration setup with VERI50 EFT 23
1.2.3. EFT: IMU3000 F5/F6, internal CDN, calibration setup 25
1.2.4. EFT: IMU3000 F5/F6, internal CDN, test setup 27
1.2.5. EFT: IMU3000 F5/F6, CDN2000-06-25 (or any three phase manual CDN), calibration setup 29
1.2.6. EFT: IMU3000 F5/F6, CDN2000-06-25 (or any three phase manual CDN), test setup 31
1.2.7. EFT: IMU3000 F5/F6, CDN3000A-06-32 (or any three phase automatic CDN 32A and 63A), calibration setup 33
1.2.8. EFT: IMU3000 F5/F6, CDN3000A-06-32 (or any three phase automatic CDN 32A and 63A), test setup 35
1.2.9. EFT: IMU3000 F5/F6, CDN-A-3P-100-480 F-S (also 690V version), calibration setup 37
1.2.10. EFT: IMU3000 F5/F6, CDN-A-3P-100-480 F-S (also 690V version), test setup 39
1.2.11. EFT: IMU3000 F5/F6, CDN-A-3P100-AC-DC, calibration setup 41
1.2.12. EFT: IMU3000 F5/F6, CDN-A-3P100-AC-DC, test setup DC side 43
1.2.13. EFT: IMU3000 F5/F6, CDN-A-3P100-AC-DC, test setup AC side 45
1.2.14. EFT: IMU3000 F5/F6, CDN-A-3P200-480 F-S (also 690V version), calibration setup 47
1.2.15. EFT: IMU3000 F5/F6, CDN-A-3P200-480 F-S (also 690V version), test setup 49
1.2.16. EFT: IMU3000 F5/F6, CN-EFT1000 (suitable for testing all types of I/O lines), calibration setup 51
1.2.17. EFT: IMU3000 F5/F6, CN-EFT1000 (suitable for testing all types of I/O lines), test setup 53
1.2.18. EFT: IMU3000 F5/F6, CN-BALUN (differential mode test according to ANSI C37.90, ISO 7637-4), calibration setup 55
1.2.19. EFT: IMU3000 F5/F6, CN-BALUN (differential mode test according to ANSI C37.90, ISO 7637-4), test setup 57
1.2.20. EFT: IMU3000 F5/F6, EFT INSULATION, test setup 59
1.3. CWG/Surge 1.2/50 µs & 8/20 µs calibration and test setup as per IEC 61000-4-5 latest edition 61
1.3.1. CWG: IMU3000 S/S6, direct output, voltage calibration setup 62
1.3.2. CWG: IMU3000 S/S6, direct output, current calibration setup 64
1.3.3. CWG: IMU3000 S/S6, direct output, test setup example: test on shielded I/O lines 66
1.3.4. CWG: IMU3000 S/S6, internal CDN, voltage calibration setup 68
1.3.5. CWG: IMU3000 S/S6, internal CDN, current calibration setup 70
1.3.6. CWG: IMU3000 S/S6, internal CDN, test setup 72
1.3.7. CWG: IMU3000 S/S6, CDN2000-06-25 (or any three phase manual CDN), voltage calibration setup 74
1.3.8. CWG: IMU3000 S/S6, CDN2000-06-25 (or any three phase manual CDN), current calibration setup 76
1.3.9. CWG: IMU3000 S/S6, CDN2000-06-25 (or any three phase manual CDN), test setup 78

1.3.10. CWG: IMU3000 S/S6, CDN3000A-06-32 (or any three phase automatic CDN 32 A and 63A), voltage calibration setup 79
1.3.11. CWG: IMU3000 S/S6, CDN3000A-06-32 (or any three phase automatic CDN 32A and 63 A), current calibration setup 80
1.3.12. CWG: IMU3000 S/S6, CDN3000A-06-32 (or any three phase automatic CDN 32A and 63 A), test setup 82
1.3.13. CWG: IMU3000 S/S6, CDN-A-3P100-480 F-S (also 690V version), voltage calibration setup 84
1.3.14. CWG: IMU3000 S/S6, CDN-A-3P100-480 F-S (also 690V version), current calibration setup 86
1.3.15. CWG: IMU3000 S/S6, CDN-A-3P100-480 F-S (also 690V version), test setup 88
1.3.16. CWG: IMU3000 S/S6, CDN-A-3P100-AC-DC, voltage calibration setup 90
1.3.17. CWG: IMU3000 S/S6, CDN-A-3P100-AC-DC, current calibration setup 92
1.3.18. CWG: IMU3000 S/S6, CDN-A-3P100-AC-DC, test setup DC side 94
1.3.19. CWG: IMU3000 S/S6, CDN-A-3P100-AC-DC, test setup AC side 96
1.3.20. CWG: IMU3000 S/S6, CDN-A-3P200-480 F-S (also 690V version), voltage calibration setup 98
1.3.21. CWG: IMU3000 S/S6, CDN-A-3P200-480 F-S (also 690V version), current calibration setup 100
1.3.22. CWG: IMU3000 S/S6, CDN-A-3P200-480 F-S (also 690V version), test setup 102
1.3.23. CWG: IMU3000 S/S6, CDN-KIT1000 ED3, voltage calibration setup 104
1.3.24. CWG: IMU3000 S/S6, CDN-KIT1000 ED3, current calibration setup 106
1.3.25. CWG: IMU3000 S/S6, CDN-KIT1000 ED3, test setup 108
1.3.26. CWG: IMU3000 S/S6, CDN-DATA-4L, voltage calibration setup 110
1.3.27. CWG: IMU3000 S/S6, CDN-DATA-4L, current calibration setup 112
1.3.28. CWG: IMU3000 S/S6, CDN-DATA-4L, test setup 114
1.3.29. CWG: IMU3000 S/S6, CDN-DATA-8L, voltage calibration setup 116
1.3.30. CWG: IMU3000 S/S6, CDN-DATA-8L, current calibration setup 118
1.3.31. CWG: IMU3000 S/S6, CDN-DATA-8L, test setup 120
1.3.32. CWG: IMU3000 S/S6, CDN-UTP ED3, voltage calibration setup for 2 unsym. lines 122
1.3.33. CWG: IMU3000 S/S6, CDN-UTP ED3, current calibration setup for 2 unsym. lines 124
1.3.34. CWG: IMU3000 S/S6, CDN-UTP ED3, test setup for 2 unsym. lines 126
1.3.35. CWG: IMU3000 S/S6, CDN-UTP ED3, voltage calibration setup for 4 sym. lines (2 sym. lines also possible) 128
1.3.36. CWG: IMU3000 S/S6, CDN-UTP ED3, current calibration setup for 4 sym. lines (2 sym. lines also possible) 130
1.3.37. CWG: IMU3000 S/S6, CDN-UTP ED3, test setup for 4 sym. lines (2 sym. lines also possible) 132
1.3.38. CWG: IMU3000 S/S6, CDN-UTP8 ED3, voltage calibration setup for 2 unsym. lines (4 unsym. lines also possible) 134
1.3.39. CWG: IMU3000 S/S6, CDN-UTP8 ED3, current calibration setup for 2 unsym. lines (4 unsym. lines also possible) 136
1.3.40. CWG: IMU3000 S/S6, CDN-UTP8 ED3, test setup for 2 unsym. lines (4 unsym. lines also possible) 138
1.3.41. CWG: IMU3000 S/S6, CDN-UTP8 ED3, voltage calibration setup for 8 sym. lines (2, 4 sym. lines also possible) 140
1.3.42. CWG: IMU3000 S/S6, CDN-UTP8 ED3, current calibration setup for 8 sym. lines (2, 4 sym. lines also possible) 142
1.3.43. CWG: IMU3000 S/S6, CDN-UTP8 ED3, test setup for 8 sym. lines without Ethernet adapters (2, 4 sym. lines also possible) 144
1.3.44. CWG: IMU3000 S/S6, CDN-UTP8 ED3, test setup for 8 sym. lines with Ethernet adapters, step one: connections and bridges on the front panel 146
1.3.45. CWG: IMU3000 S/S6, CDN-UTP8 ED3, test setup for 8 sym. lines with Ethernet adapters, step two: prepare adapters and cables 148
1.3.46. CWG: IMU3000 S/S6, CDN-UTP8 ED3, test setup for 8 sym. lines with Ethernet adapters, step three: connect adapters, cables, EUT and AE 150
1.4. Telecom Surge 10/700 µs & 5/320 µs calibration and test setup as per IEC 61000-4-5 latest edition 152
1.4.1. Tel. surge: IMU3000 T/T6, CDN-UTP ED3, voltage calibration setup for 2 sym. lines (4 sym. lines also possible) 153

1.4.2. Tel. surge: IMU3000 T/T6, CDN-UTP ED3, current calibration setup for 2 sym. lines (4 sym. lines also possible) 155
1.4.3. Tel. surge: IMU3000 T/T6, CDN-UTP ED3, test setup for 2 sym. lines (2 sym. lines also possible) 157
1.4.4. Tel. surge: IMU3000 T/T6, CDN-UTP8 ED3, voltage calibration setup for 2 sym. lines (4, 8 sym. lines also possible)....159
1.4.5. Tel. surge: IMU3000 T/T6, CDN-UTP8 ED3, current calibration setup for 2 sym. lines (4, 8 sym. lines also possible) 161
1.4.6. Tel. surge: IMU3000 T/T6, CDN-UTP8 ED3, test setup for 2 sym. lines without Ethernet adapters (4, 8 sym. lines also possible)....163
1.4.7. Tel. surge: IMU3000 T/T6, CDN-UTP8 ED3, test setup for 2 sym. lines with Ethernet adapters, step one: connections and bridges on the from panel 165
1.4.8. Tel. surge: IMU3000 T/T6, CDN-UTP8 ED3, test setup for 2 sym. lines with Ethernet adapters, step two: prepare adapters and cables 167
1.4.9. Tel. surge: IMU3000 T/T6, CDN-UTP8 ED3, test setup for 2 sym. lines with Ethernet adapters, step three: connect adapters, cables, EUT and AE 169
1.5. Magnetic field 50/60 Hz calibration and test setup as per IEC 61000-4-8 latest edition 171
1.5.1. Magnetic field 50/60 Hz: IMU3000 V, MF1000-1, calibration setup 172
1.5.2. Magnetic field 50/60 Hz: IMU3000 V, MF1000-1, test setup 174
1.5.3. Magnetic field 50/60 Hz: IMU3000 V, MF1000-2, calibration setup 176
1.5.4. Magnetic field 50/60 Hz: IMU3000 V, MF1000-2, test setup 178
1.5.5. Magnetic field 50/60 Hz: IMU3000 V, MF1000-3, calibration setup 180
1.5.6. Magnetic field 50/60 Hz: IMU3000 V, MF1000-3, test setup 182
1.6. Magnetic pulse calibration and test setup as per IEC 61000-4-9 latest edition 184
1.6.1. Magnetic pulse: IMU3000 S, MF1000-1, calibration setup....185
1.6.2. Magnetic pulse: IMU3000 S, MF1000-1, test setup....187
1.6.3. Magnetic pulse: IMU3000 S, MF1000-2, calibration setup....189
1.6.4. Magnetic pulse: IMU3000 S, MF1000-2, test setup....191
1.7. Interruptions, dips and variations: calibration and test setup as per IEC61000-4-11 (IEC61000-4-34 also) latest edition 193
1.7.1. Int., dips, var.: IMU3000 D-V (internal variac 5A), inrush current calibration setup 194
1.7.2. Int., dips, var.: IMU3000 D-V (internal variac 5A), switch time calibration setup 196
1.7.3. Int., dips, var.: IMU3000 D-V (internal variac 5A), test setup 198
1.7.4. Int., dips, var.: IMU3000 D, VAR-EXT1000 (16A), inrush current calibration setup....200
1.7.5. Int., dips, var.: IMU3000 D, VAR-EXT1000 (16A), switch time calibration setup 202
1.7.6. Int., dips, var.: IMU3000 D, VAR-EXT1000 (16A), test setup....204
1.7.7. Int., dips, var.: IMU3000 D, PFS 32, SCR32-AMD1 (also valid for PFS63+SRC63 and PFS75+SRC75 all models), inrush current calibration setup 206
1.7.8. Int., dips, var.: IMU3000 D, PFS 32, SCR32-AMD1 (also valid for PFS63+SRC63 and PFS75+SRC75 all models), switch time calibration setup 208
1.7.9. Int., dips, var.: IMU3000 D, PFS 32, SCR32-AMD1 (also valid for PFS63+SRC63 and PFS75+SRC75 all models), test setup 210
1.8. Ring wave 100 kHz calibration and test setup as per IEC 61000-4-12 latest edition....212
1.8.1. RWG: IMU3000 R/R6, direct output, voltage calibration setup 213
1.8.2. RWG: IMU3000 R/R6, direct output, current calibration setup 215
1.8.3. RWG: IMU3000 R/R6, internal CDN, voltage calibration setup 217
1.8.4. RWG: IMU3000 R/R6, internal CDN, current calibration setup 219
1.8.5. RWG: IMU3000 R/R6, internal CDN, test setup 221
1.8.6. RWG: IMU3000 R/R6, CDN2000-06-25 (or any three phase manual CDN), voltage calibration setup 223
1.8.7. RWG: IMU3000 R/R6, CDN2000-06-25 (or any three phase manual CDN), current calibration setup 225
1.8.8. RWG: IMU3000 R/R6, CDN2000-06-25 (or any three phase manual CDN), test setup 227

1.8.9. RWG: IMU3000 R/R6, CDN3000A-06-32 (any version of CDN3000A), voltage calibration setup 229
1.8.10. RWG: IMU3000 R/R6, CDN3000A-06-32 (any version of CDN3000A), current calibration setup 231
1.8.11. RWG: IMU3000 R/R6, CDN3000A-06-32 (any version of CDN3000A), test setup 233
1.8.12. RWG: IMU3000 R/R6, CDN-DATA-4L, voltage calibration setup 235
1.8.13. RWG: IMU3000 R/R6, CDN-DATA-4L, current calibration setup 237
1.8.14. RWG: IMU3000 R/R6, CDN-DATA-4L, test setup 239
1.8.15. RWG: IMU3000 R/R6, CDN-DATA-8L, voltage calibration setup 241
1.8.16. RWG: IMU3000 R/R6, CDN-DATA-8L, current calibration setup 243
1.8.17. RWG: IMU3000 R/R6, CDN-DATA-8L, test setup 245
1.9. Common mode disturbances calibration and test setup as per IEC 61000-4-16 latest edition 247
1.9.1. Common mode: IMU3000 C, voltage calibration setup up to 30V 248
1.9.2. Common mode: IMU3000 C, current (impedance) calibration setup up to 30V 250
1.9.3. Common mode: IMU3000 C, CN16, test setup up to 30V 252
1.9.4. Common mode: IMU3000 C, CN16, DN16-1P16 (or DN16-1P6), test setup up to 30V 254
1.9.5. Common mode: IMU3000 C, CN16T, test setup up to 30V 256
1.9.6. Common mode: IMU3000 C, EXT-TRA3000 C-SHORT, PS3, voltage calibration setup up to 300V 258
1.9.7. Common mode: IMU3000 C, EXT-TRA3000 C-SHORT, PS3, current (impedance) calibration setup up to 300V 260
1.9.8. Common mode: IMU3000 C, EXT-TRA3000 C-SHORT, PS3, CN16, test setup up to 300V 262
1.9.9. Common mode: IMU3000 C, EXT-TRA3000 C-SHORT, PS3, CN16, DN16-1P16 (or DN16-1P6), test setup up to 300V 264
1.9.10. Common mode: IMU3000 C, EXT-TRA3000 C-SHORT, PS3, CN16DC, test setup up to 300V 266
1.9.11. Common mode: IMU3000 C, EXT-TRA3000 C-SHORT, PS3, CN16DC, DN16-1P16 (or DN16-1P6), test setup up to 300V 268
1.9.12. Common mode: IMU3000 C, EXT-TRA3000 C-SHORT, PS3, CN16T, test setup up to 300V 270
1.10. Differential mode disturbances calibration and test setup as per IEC 61000-4-19 latest edition 272
1.10.1. Differential mode: IMU3000 (any model), IMU SLAVE SMART I1V1, (optional PS3), calibration setup for voltage module 273
1.10.2. Differential mode: IMU3000 (any model), IMU SLAVE SMART I1V1, (optional PS3), calibration setup for CDN from voltage module 275
1.10.3. Differential mode: IMU3000 (any model), IMU SLAVE SMART I1V1, (optional PS3), voltage test setup 277
1.10.4. Differential mode: IMU3000 (any model), IMU SLAVE SMART I1V1, (optional PS3), calibration setup for current module 279
1.10.5. Differential mode: IMU3000 (any model), IMU SLAVE SMART I1V1, (optional PS3), current test setup without reference electricity meter 281
1.10.6. Differential mode: IMU3000 (any model), IMU SLAVE SMART I1V1, (optional PS3), current test setup with reference electricity meter 283
1.11. DC interruptions and dips calibration and test setup as per IEC 61000-4-29 latest edition 285
1.11.1. DC interruptions: IMU3000 D (+ EXT-TRA3000 D-29I), 1 x PS3 (+ 1 x RS232 – RS485 adapter), inrush current calibration setup 286
1.11.2. DC interruptions: IMU3000 D (+ EXT-TRA3000 D-29I), 1 x PS3 (+ 1 x RS232 – RS485 adapter), switch time calibration setup 288
1.11.3. DC interruptions: IMU3000 D (+ EXT-TRA3000 D-29I), 1 x PS3 (+ 1 x RS232 – RS485 adapter), test setup 290
1.11.4. DC dips: IMU3000 D (+ EXT-TRA3000 D-29D), 2 x PS3 (+ 2 x RS232 – RS485 adapter), inrush current calibration setup 292
1.11.5. DC dips: IMU3000 D (+ EXT-TRA3000 D-29D), 2 x PS3 (+ 2 x RS232 – RS485 adapter), switch time calibration setup 294
1.11.6. DC dips: IMU3000 D (+ EXT-TRA3000 D-29D), 2 x PS3 (+ 2 x RS232 – RS485 adapter), test setup 296

1. IMU3000 and accessories

Electro Static Discharge (ESD)
IEC 61000-4-2 / ANSI C62.41

DC DIPS
IEC 61000-4-29

10/700µs Telecom Impulse
IEC61000-4-5 + ITU K.20/21/44

Common Mode (CM)
IEC 61000-4-16

(EFT/Burst)
IEC 61000-4-4
ANSI C62.41

Combination Wave (CWG)
IEC 61000-4-5 / ANSI C62.41

AC DIPS / Interrupt
IEC 61000-4-11

Ringwave
IEC 61000-4-12 / ANSI C62.41

IEC 61000-4-2
Edition 2.0 / 2008

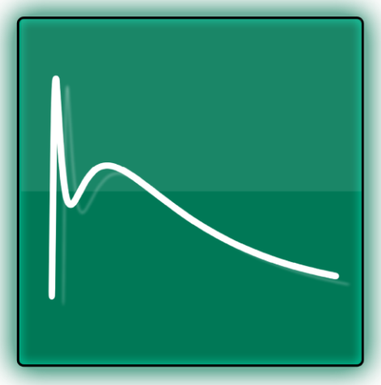

Contact discharge		Air discharge	
Level	Voltage [kV]	Level	Voltage [kV]
1	2	1	2
2	4	2	4
3	6	3	8
4	8	4	15
x	special	x	special

Contact discharge current calibration

Level	V ± 5% [kV]	t_r ± 25% [ns]	1st I_{peak} ± 15% [A]	I_{peak} 30ns ± 30% [A]	I_{peak} 60ns ± 30% [A]
1	2	0.8	7.5	4	2
2	4	0.8	15	8	4
3	6	0.8	22.5	12	6
4	8	0.8	30	16	8

1.1.1. ESD: IMU3000, EXT-TRA3000 E, calibration setup – current

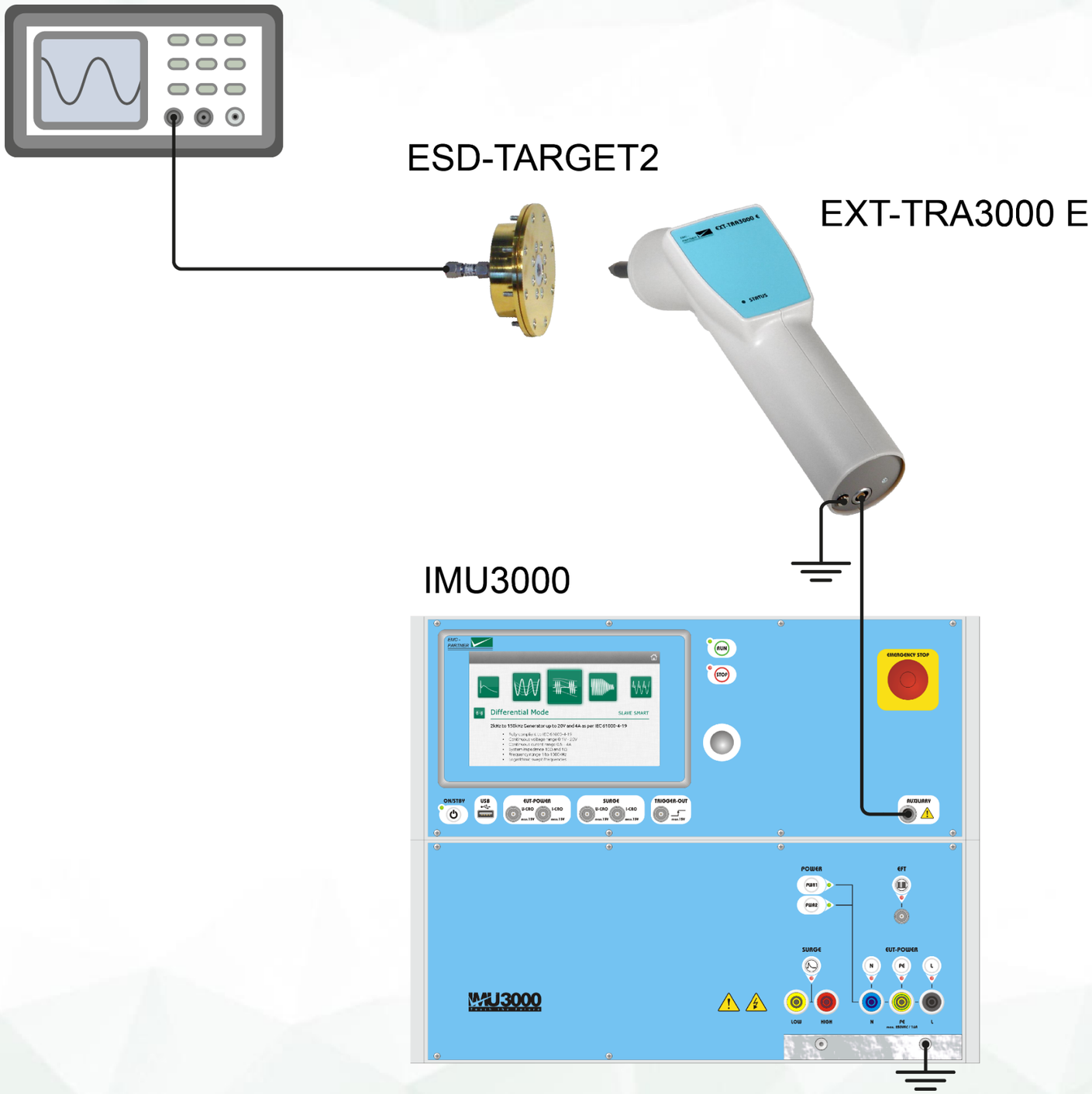

ESD-TARGET2 includes a 20 dB attenuator and a 1 m coaxial cable.

1.1.2. ESD: IMU3000, EXT-TRA3000 E, *optional* verification setup – voltage

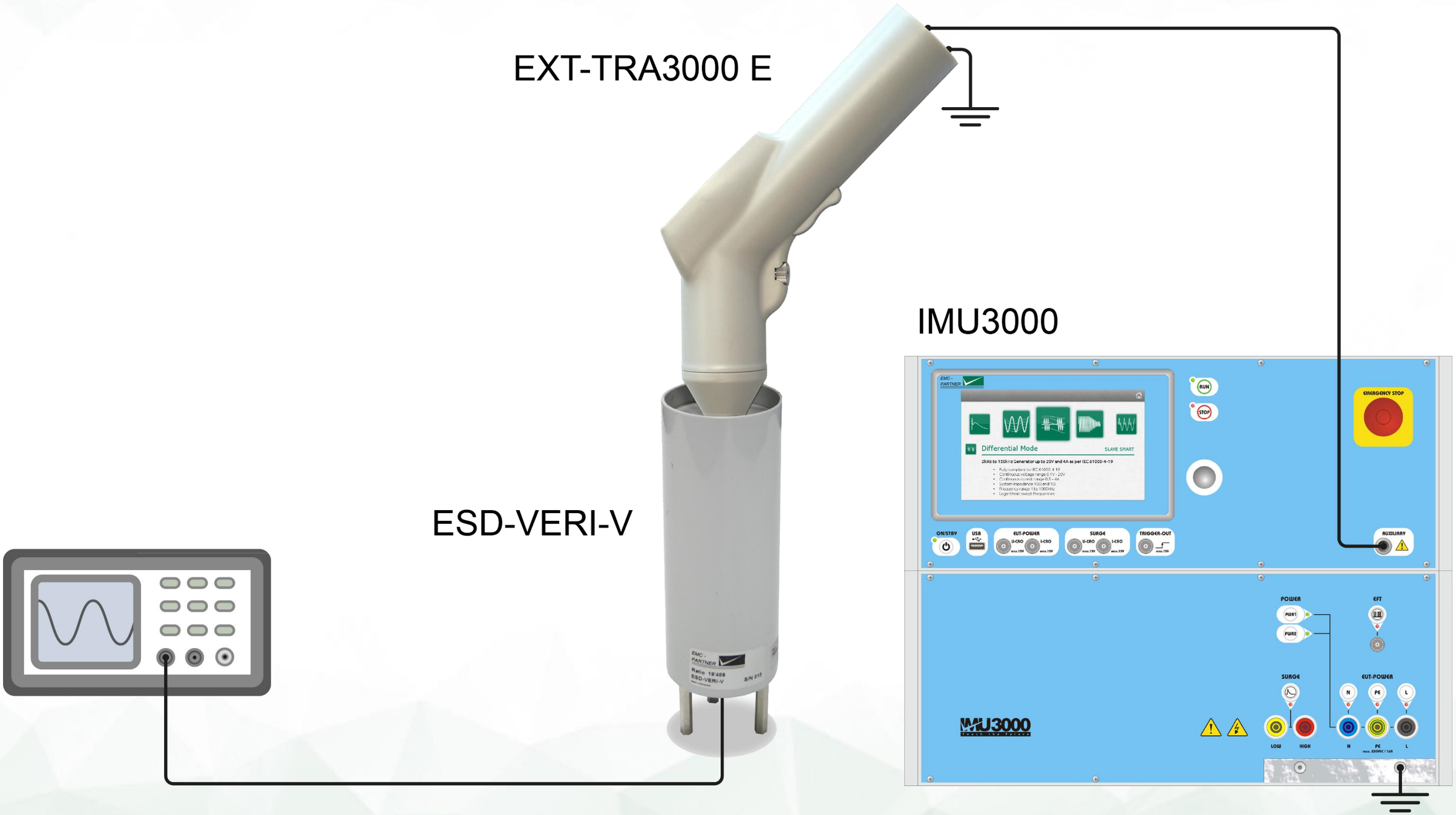

Verification of output voltage level is optional in IEC 61000-4-2, but required in other norms like for example MIL-STD-461G CS118.

1.1.3. ESD: IMU3000, EXT-TRA3000 E, ESD-STAND Ed2, *optional* stand for fixed point tests

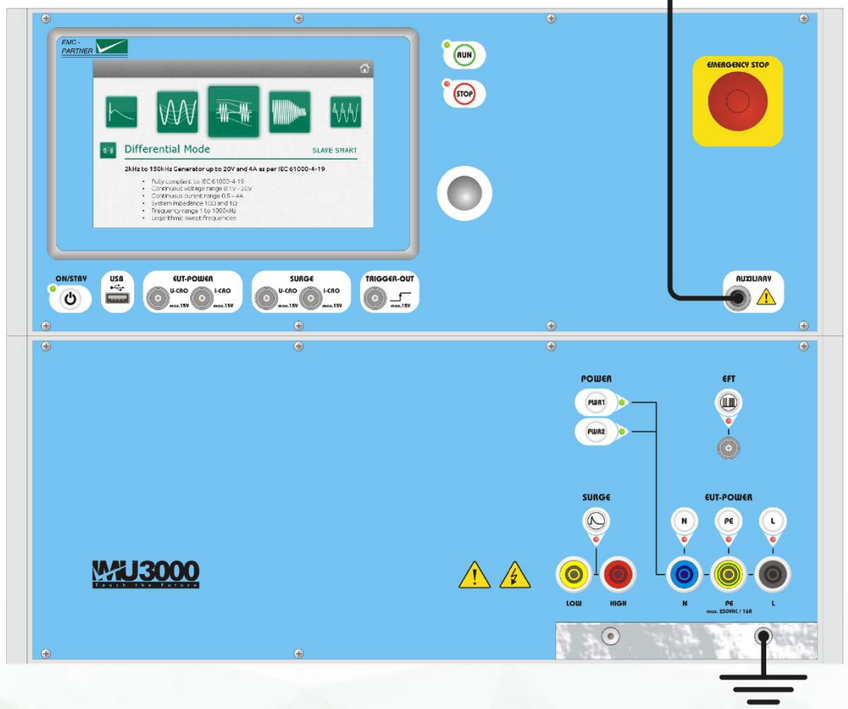

The stand is optional, recommended for tests that require many discharges in a fixed point of EUT.

1.1.4. ESD: IMU3000, EXT-TRA3000 E, test setup direct discharge

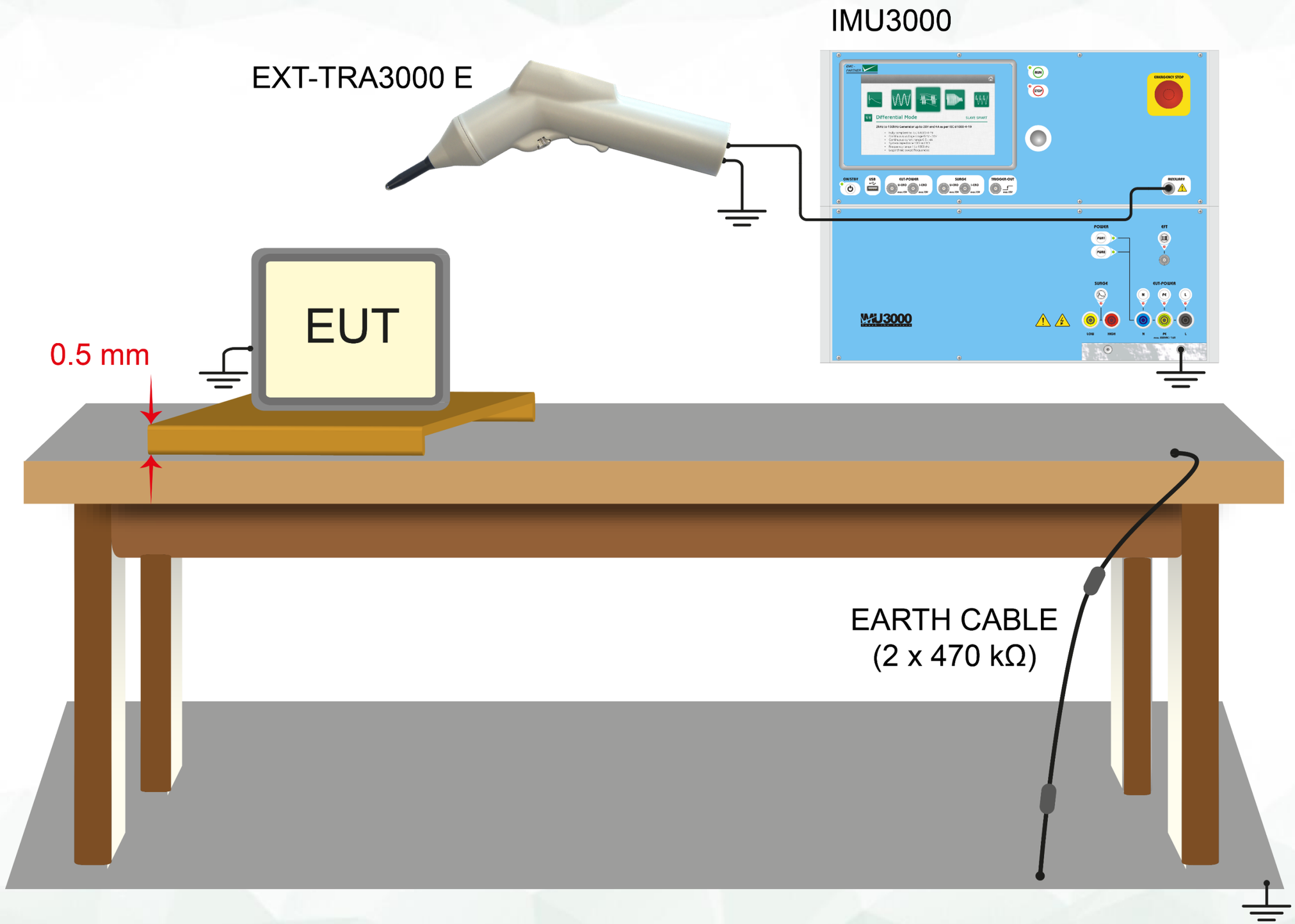

Precise dimensions, distances can be found in IEC 61000-4-2.

1.1.5. ESD: IMU3000, EXT-TRA3000 E, test setup indirect discharge

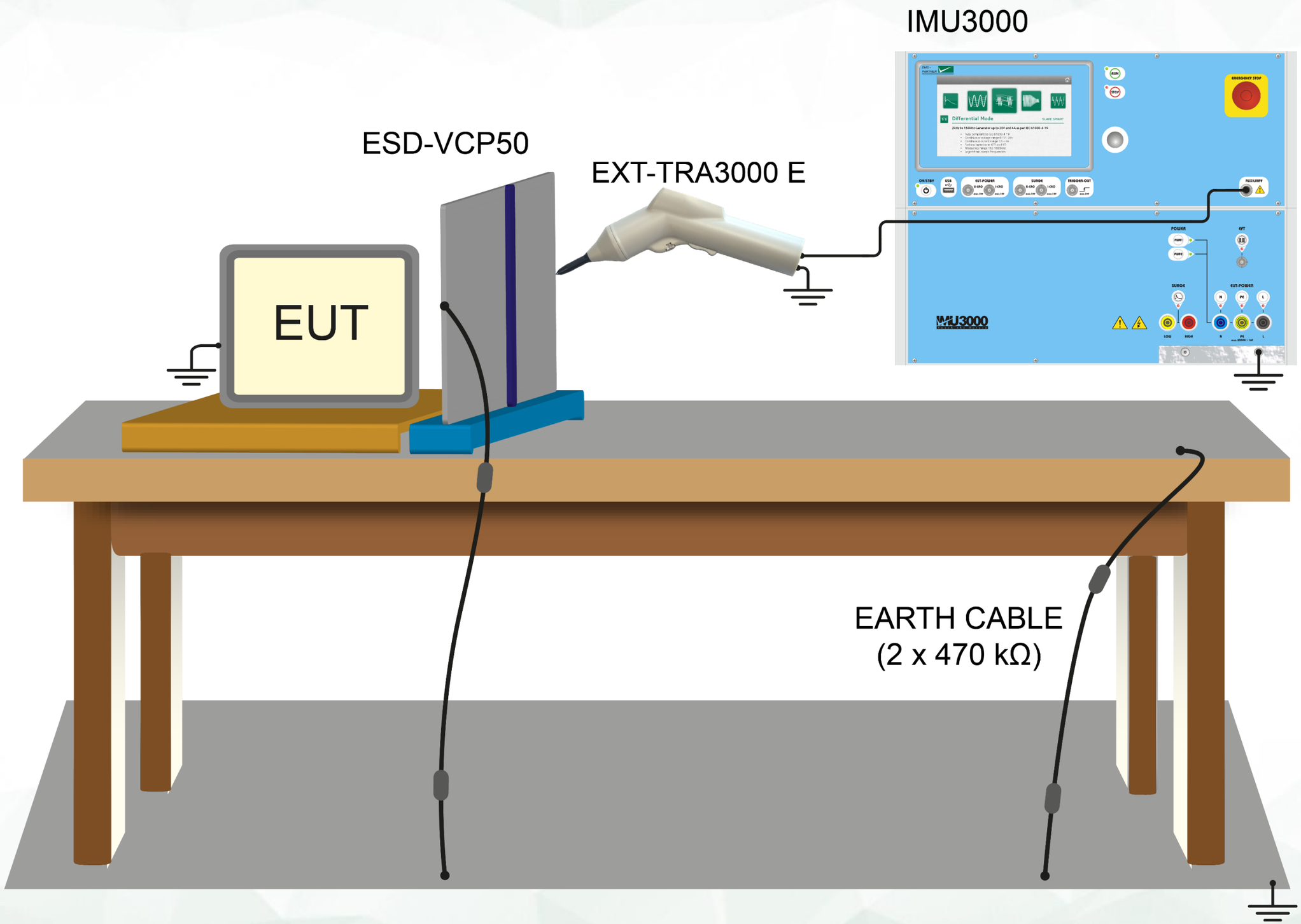

For indirect discharge test, the norm requires a Vertical Coupling Plate.

IEC 61000-4-4
Edition 3.0 / 2012

Changes from edition 2 to edition 3:

* Figures moved within the text where they are called up

* Mathematical formula for nominal EFT pulse

* Defined characteristics of test load impedance (up to 400 MHz)

* CDN calibration enlarged tolerances

* Calibration of coupling clamp with a transducer plate

* New test setups

* Measurement uncertainty (MU)

1.2.1. EFT: IMU3000 F5/F6, direct output, calibration setup with VERI1K EFT

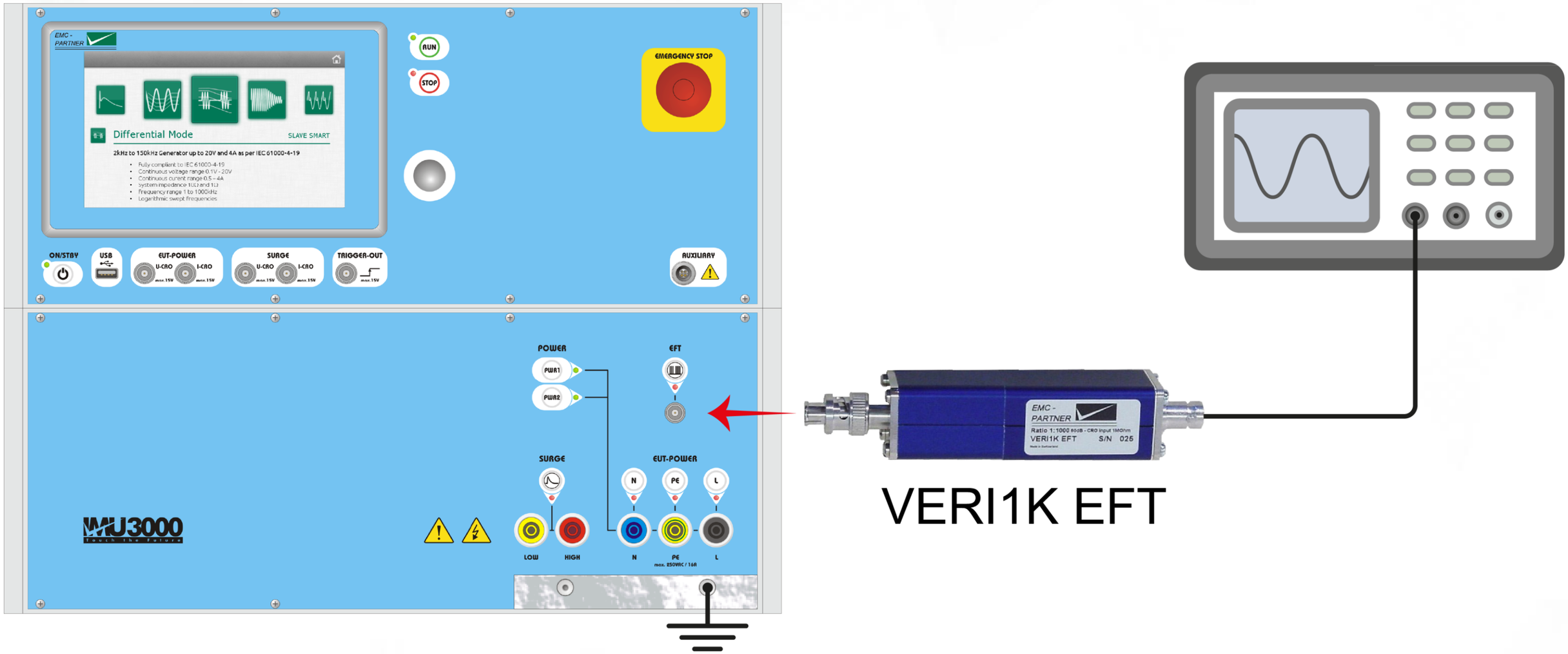

No additional attenuators are required for normal oscilloscopes (10 V input range).

1.2.2. EFT: IMU3000 F5/F6, direct output, calibration setup with VERI50 EFT

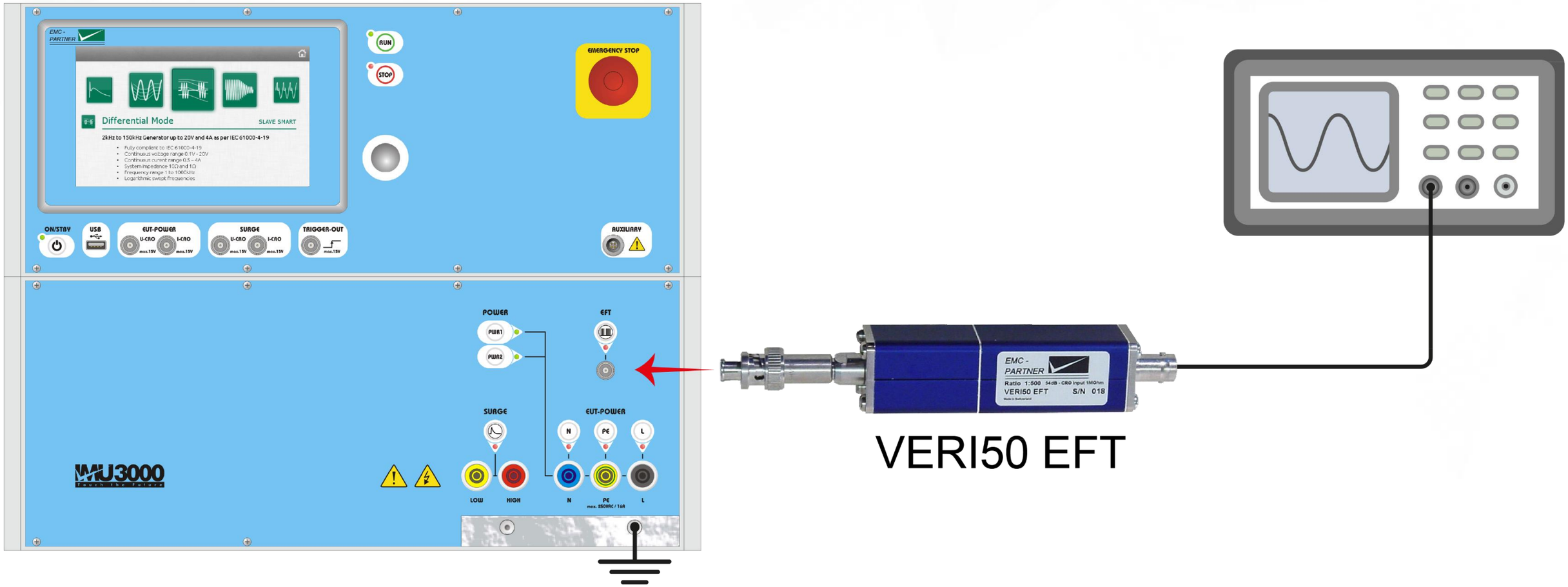

No additional attenuators are required for normal oscilloscopes (10 V input range).

1.2.3. EFT: IMU3000 F5/F6, internal CDN, calibration setup

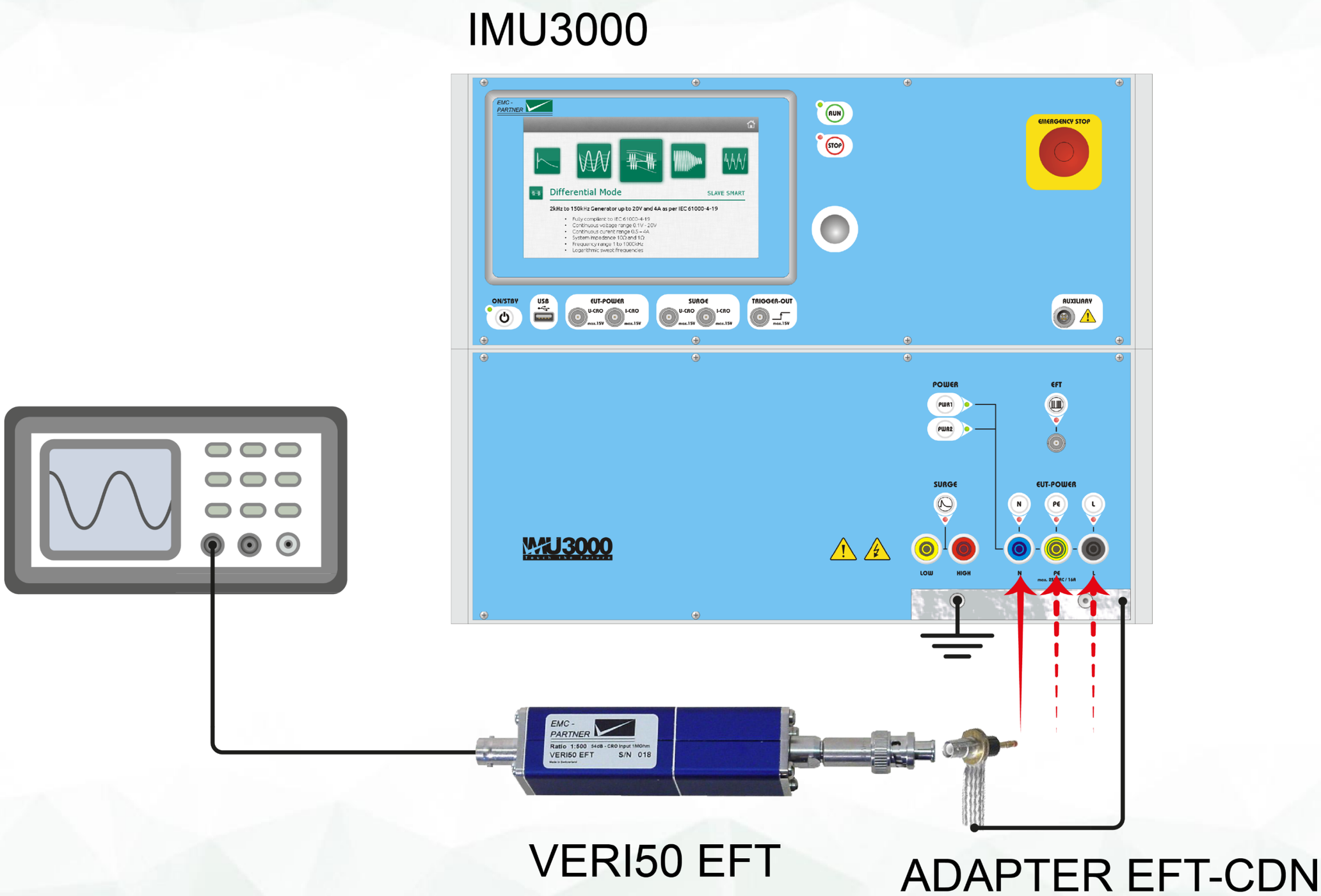

Coupling is set to Common Mode (L1+N+PE → Gnd) and signal is measured on each line separately. No power on CDN input.

1.2.4. EFT: IMU3000 F5/F6, internal CDN, test setup

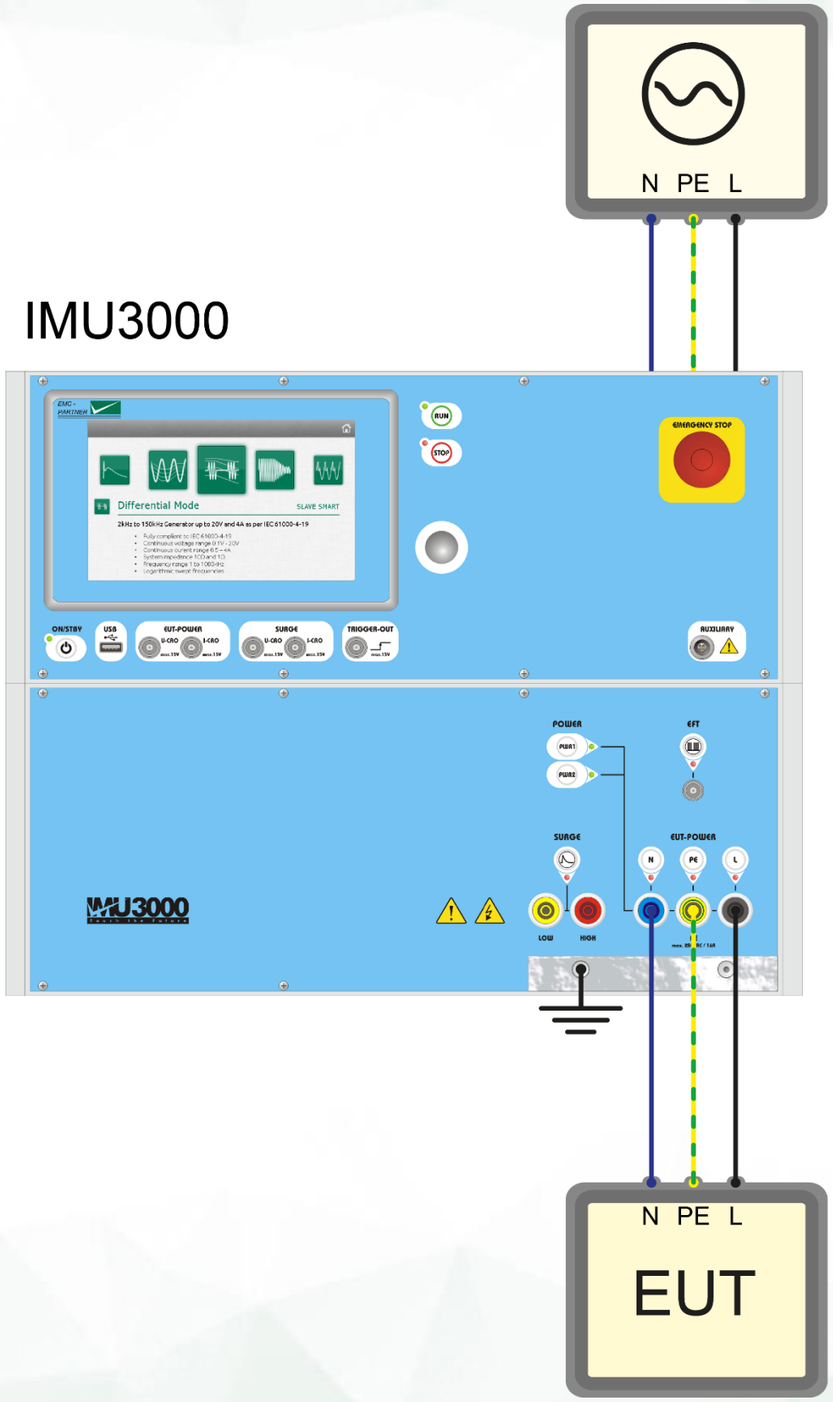

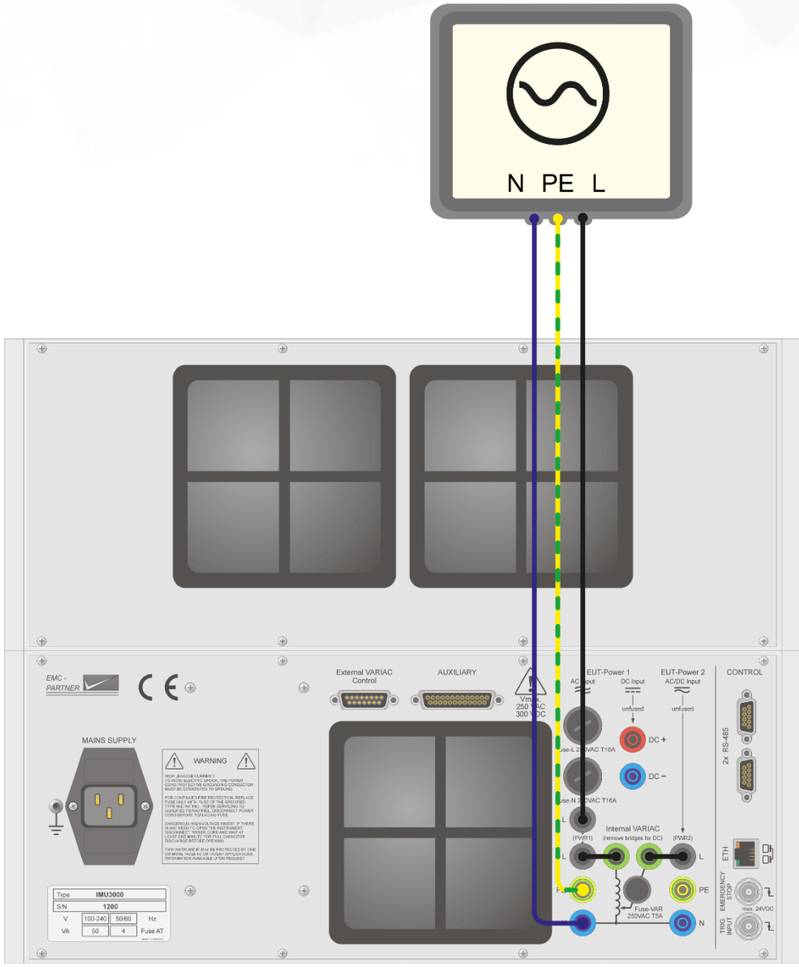

Coupling is set to Common Mode (L1+N+PE → Gnd).

1.2.5. EFT: IMU3000 F5/F6, CDN2000-06-25 (or any three phase manual CDN), calibration setup

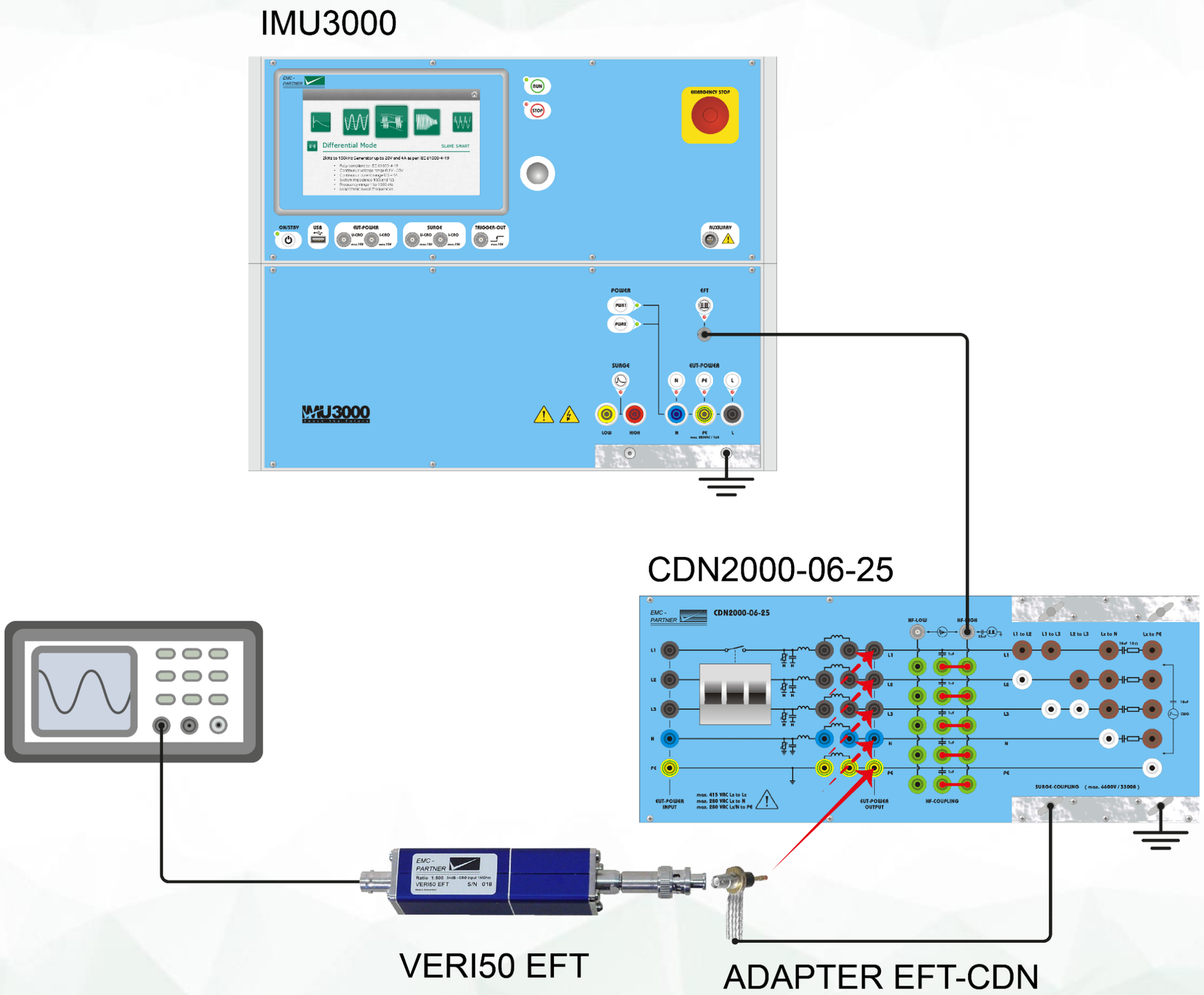

Coupling is set to Common Mode (L1+L2+L3+N+PE → Gnd) and signal is measured on each line separately with VERI50 EFT (1K not required).

1.2.6. EFT: IMU3000 F5/F6, CDN2000-06-25 (or any three phase manual CDN), test setup

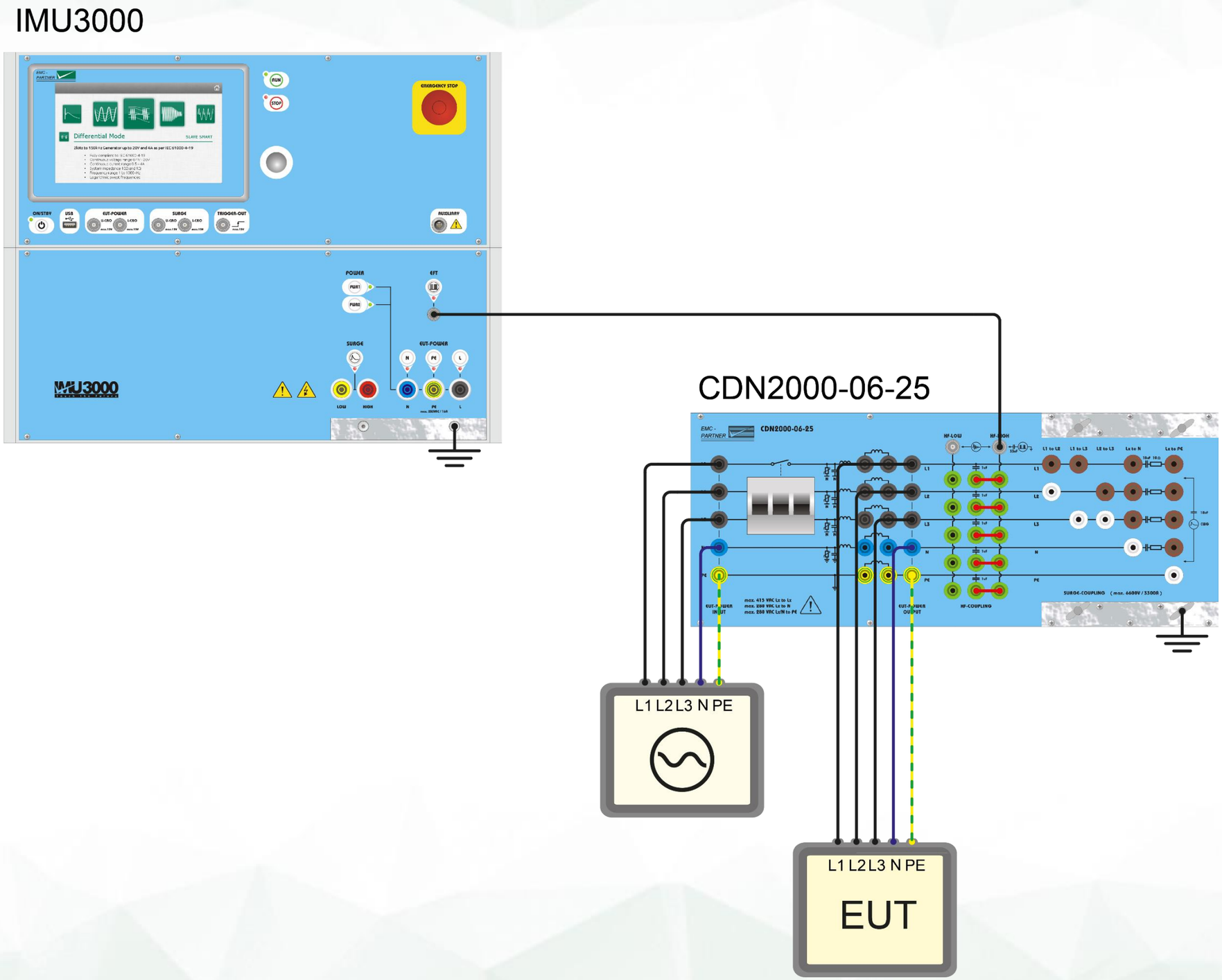

Coupling is set to Common Mode (L1+L2+L3+N+PE → Gnd).

1.2.7. EFT: IMU3000 F5/F6, CDN3000A-06-32 (or any three phase automatic CDN 32A and 63A), calibration setup

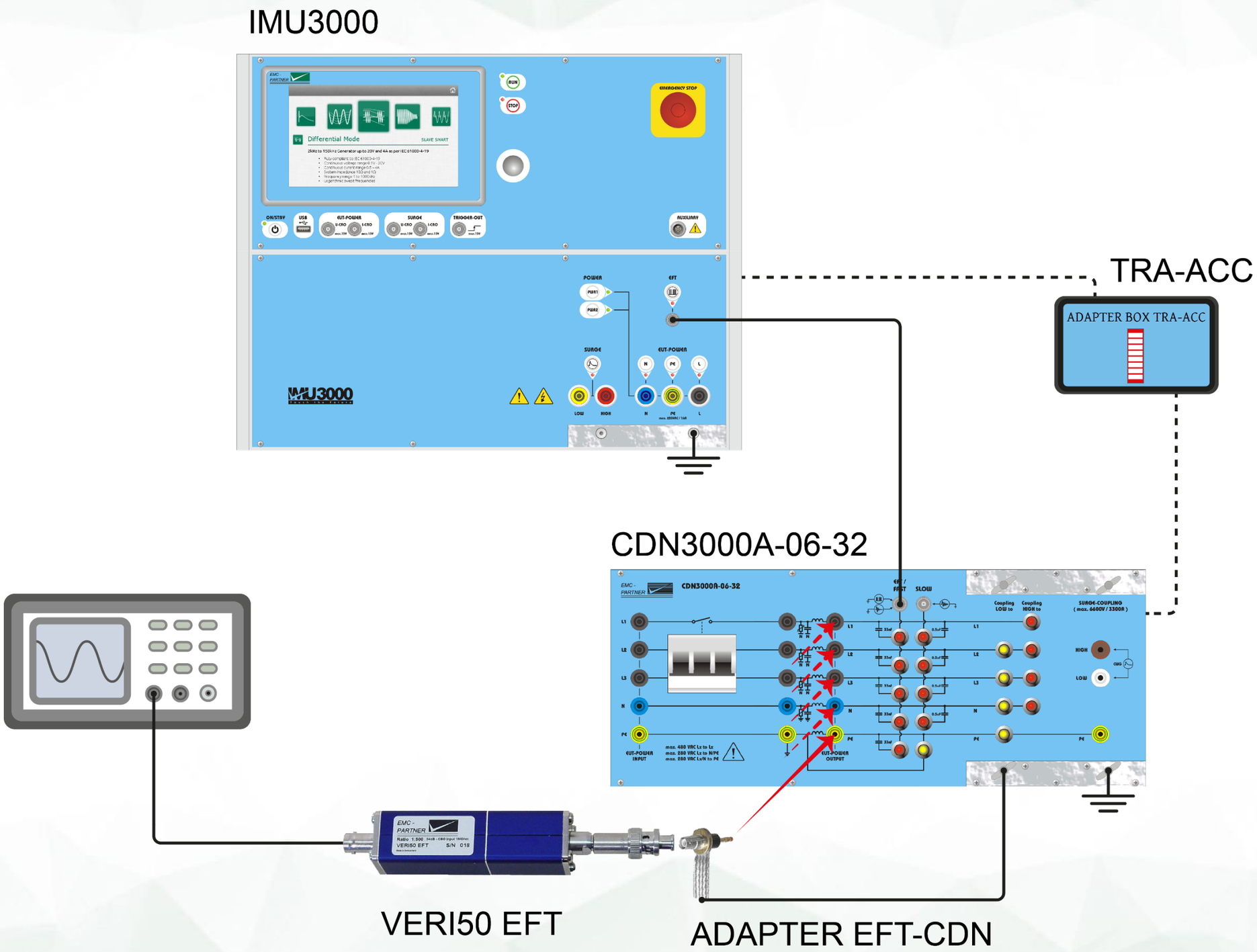

Coupling is set to Common Mode (L1+L2+L3+N+PE → Gnd) and signal is measured on each line separately with VERI50 EFT (1K not required).

1.2.8. EFT: IMU3000 F5/F6, CDN3000A-06-32 (or any three phase automatic CDN 32A and 63A), test setup

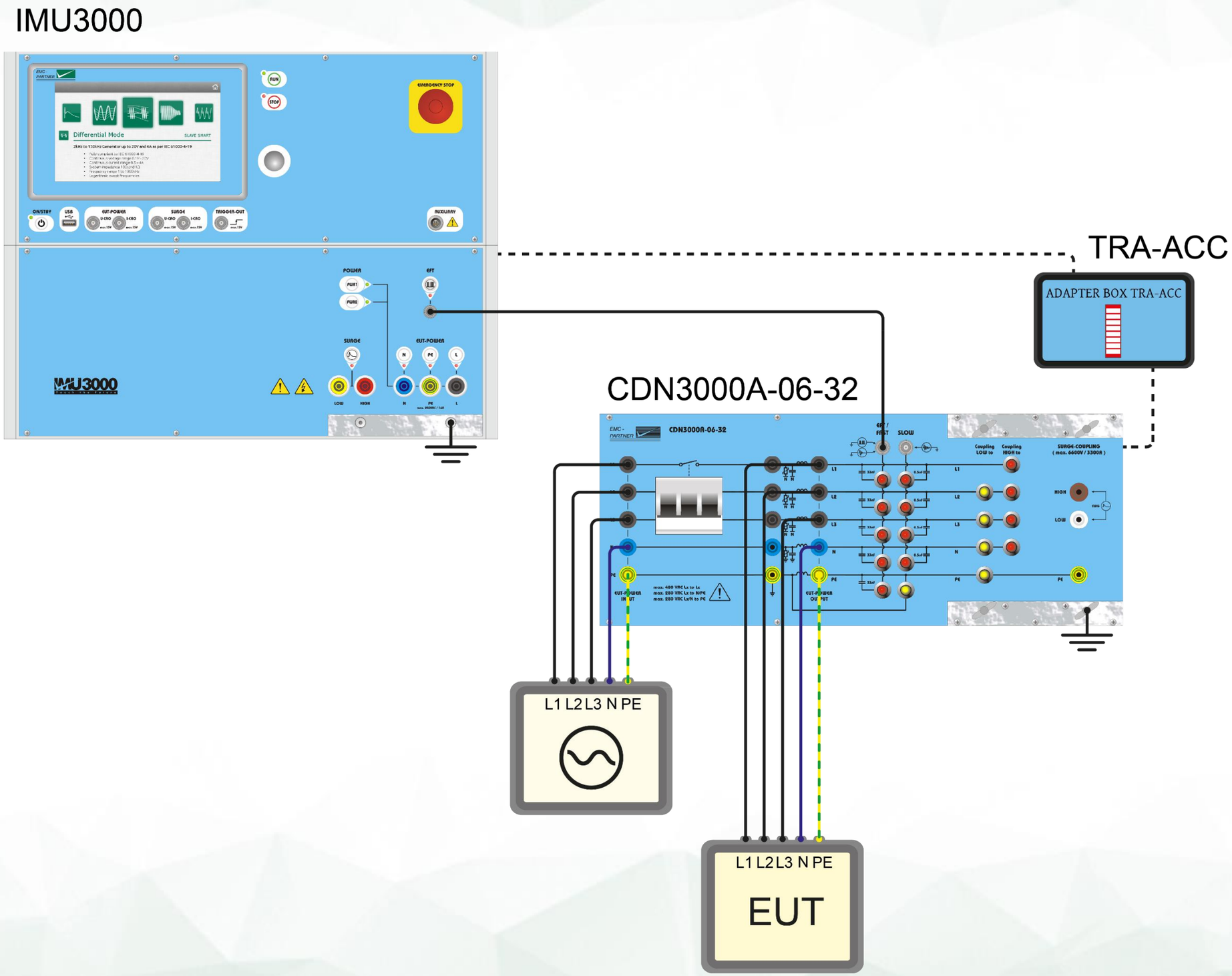

Coupling is set to Common Mode (L1+L2+L3+N+PE → Gnd).

1.2.9. EFT: IMU3000 F5/F6, CDN-A-3P-100-480 F-S (also 690V version), calibration setup

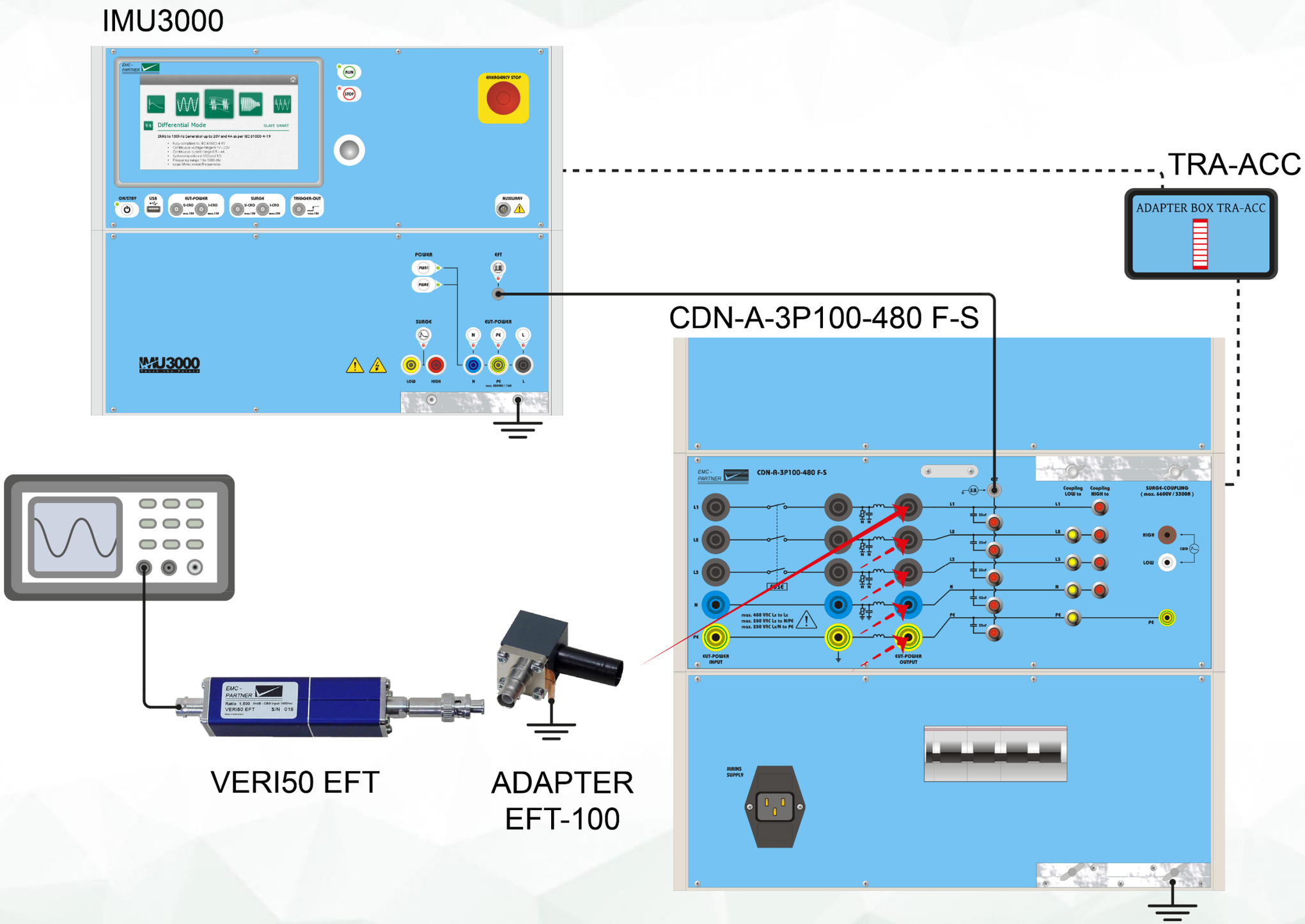

Coupling is set to Common Mode (L1+L2+L3+N+PE → Gnd) and signal is measured on each line separately with VERI50 EFT (1K not required).

1.2.10. EFT: IMU3000 F5/F6, CDN-A-3P-100-480 F-S (also 690V version), test setup

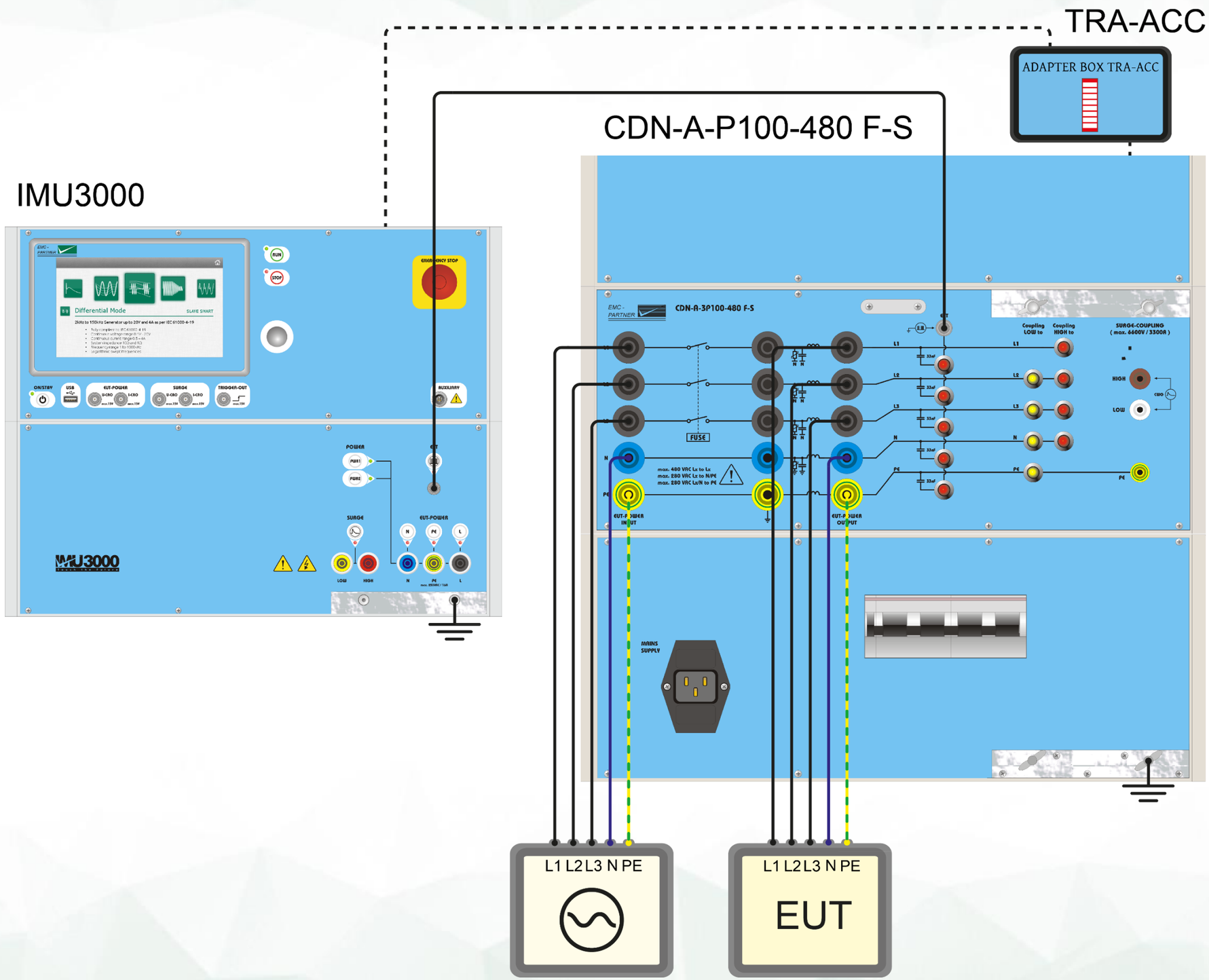

Coupling is set to Common Mode (L1+L2+L3+N+PE → Gnd).

1.2.11. EFT: IMU3000 F5/F6, CDN-A-3P100-AC-DC, calibration setup

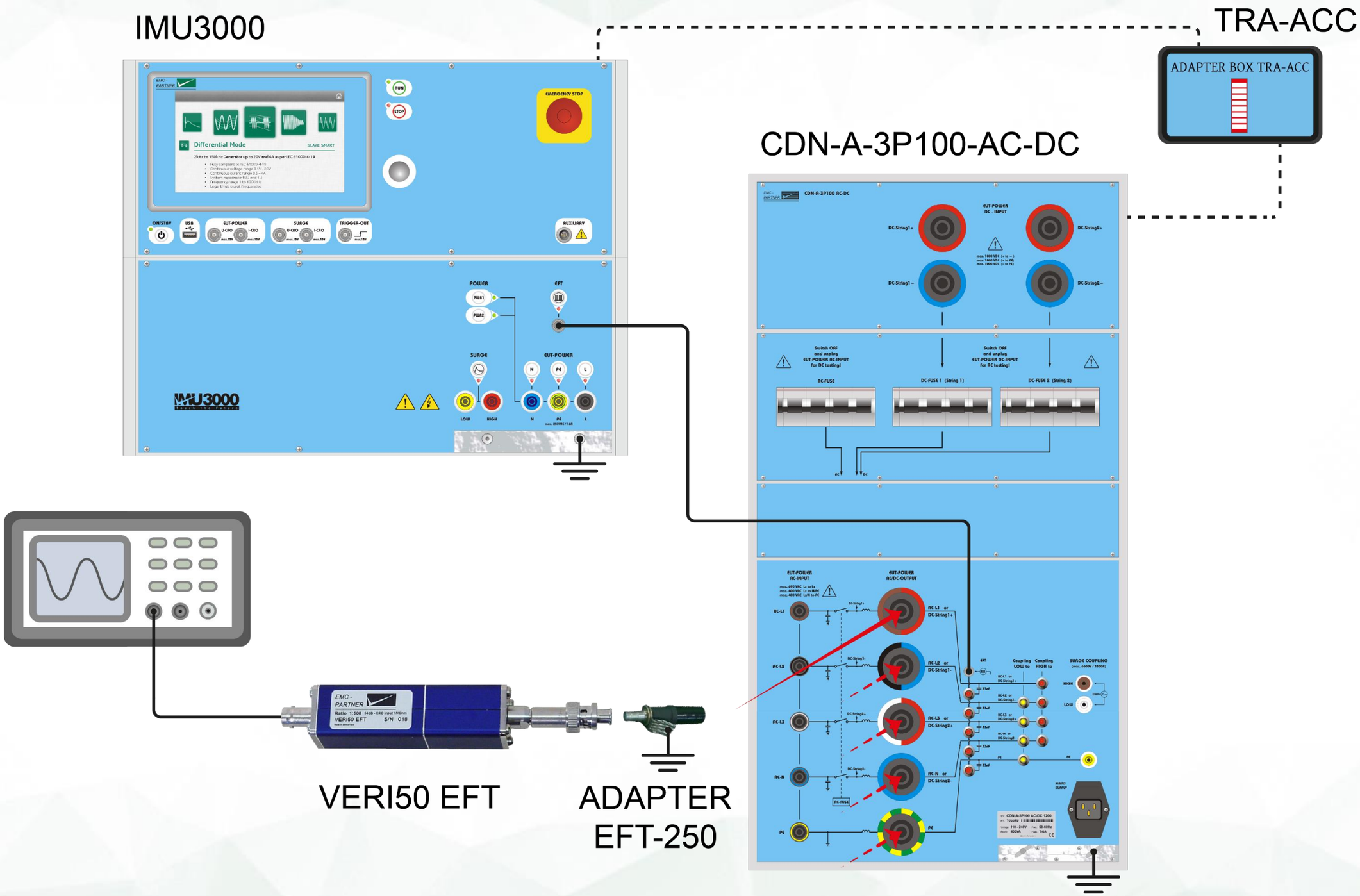

Coupling is set to Common Mode (L1+L2+L3+N+PE → Gnd) and signal is measured on each line separately with VERI50 EFT (1K not required).

1.2.12. EFT: IMU3000 F5/F6, CDN-A-3P100-AC-DC, test setup DC side

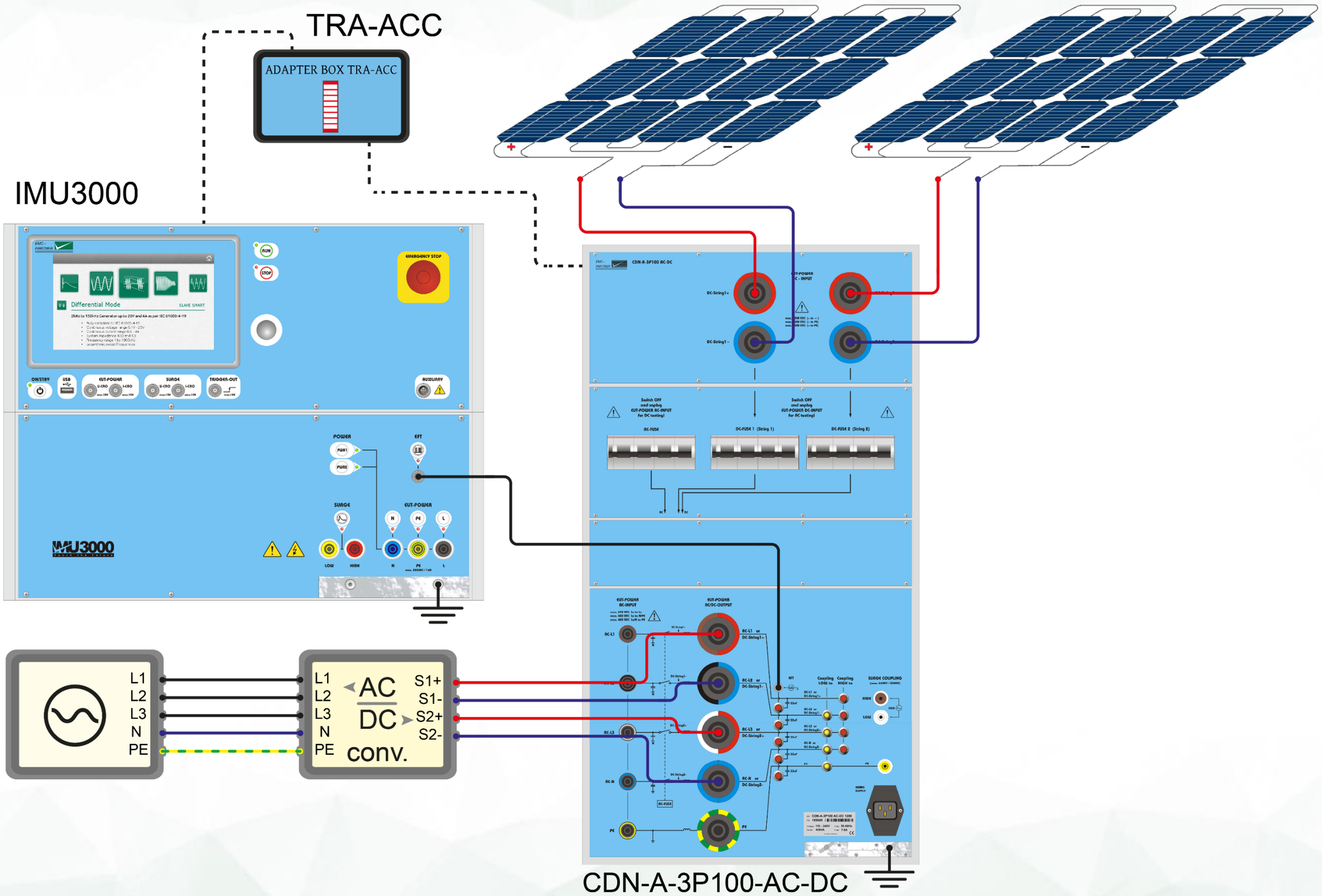

Coupling is set to Common Mode (L1+L2+L3+N+PE → Gnd).

1.2.13. EFT: IMU3000 F5/F6, CDN-A-3P100-AC-DC, test setup AC side

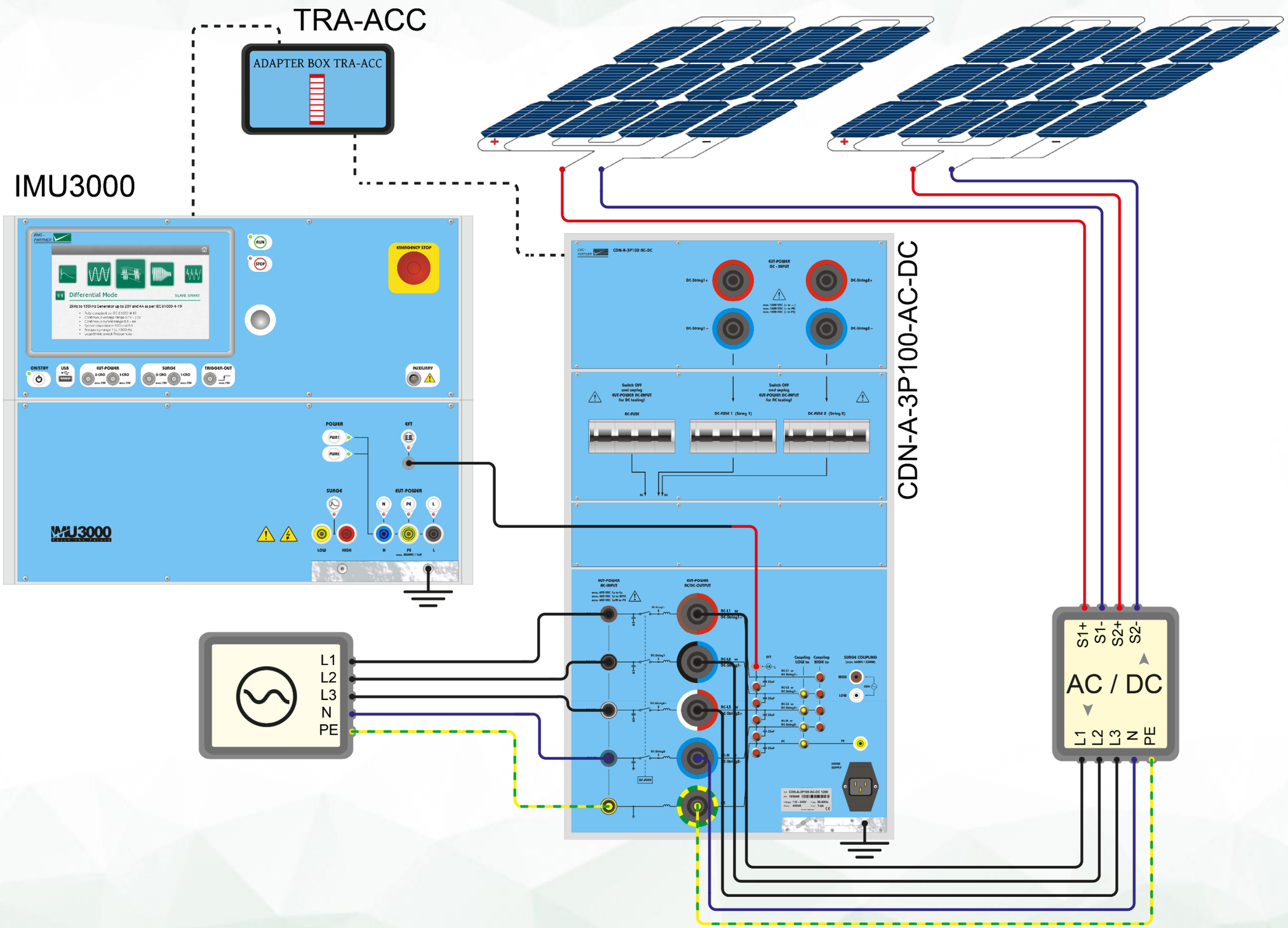

Coupling is set to Common Mode (L1+L2+L3+N+PE → Gnd).

1.2.14. EFT: IMU3000 F5/F6, CDN-A-3P200-480 F-S (also 690V version), calibration setup

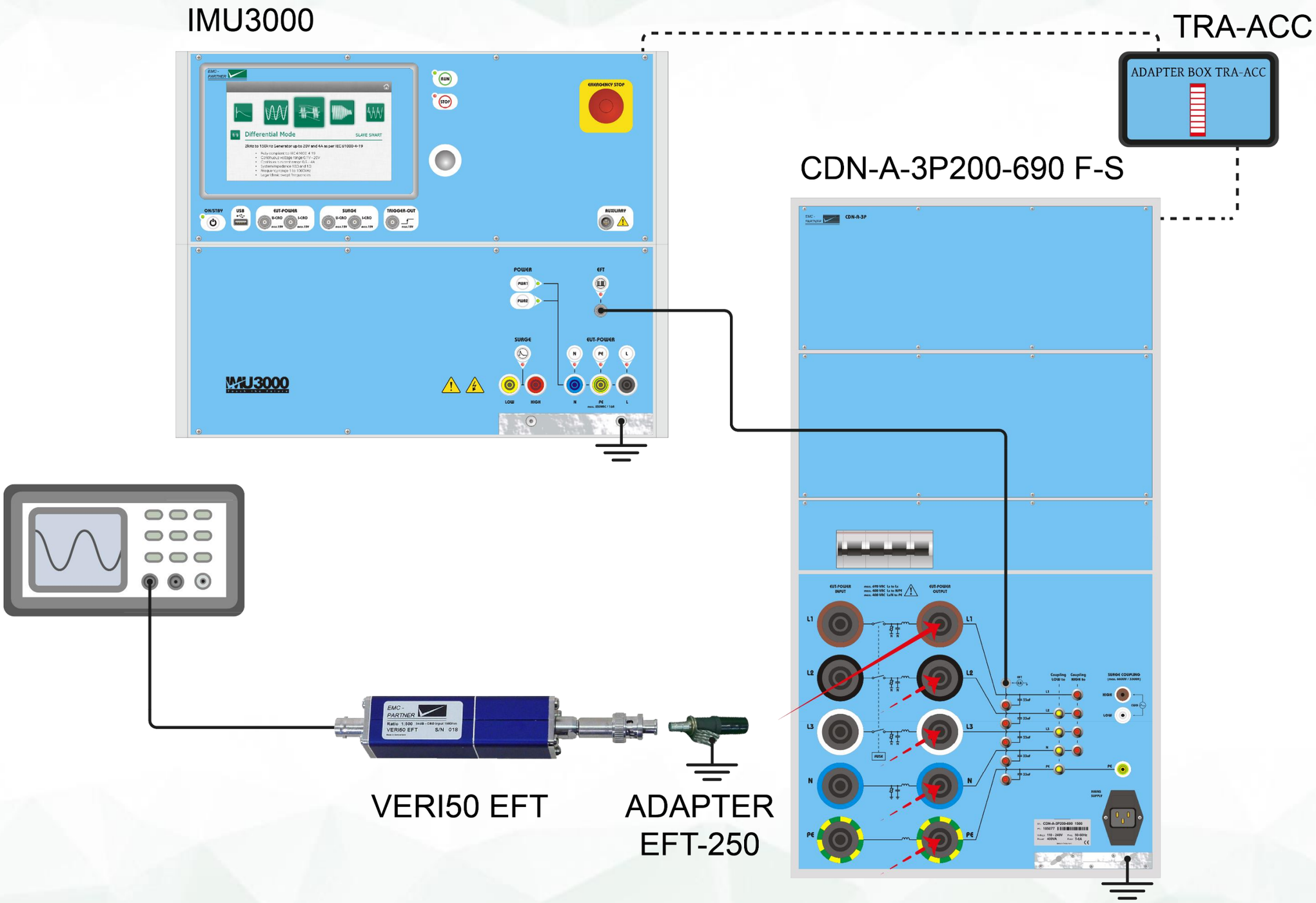

Coupling is set to Common Mode (L1+L2+L3+N+PE → Gnd) and signal is measured on each line separately with VERI50 EFT (1K not required).

1.2.15. EFT: IMU3000 F5/F6, CDN-A-3P200-480 F-S (also 690V version), test setup

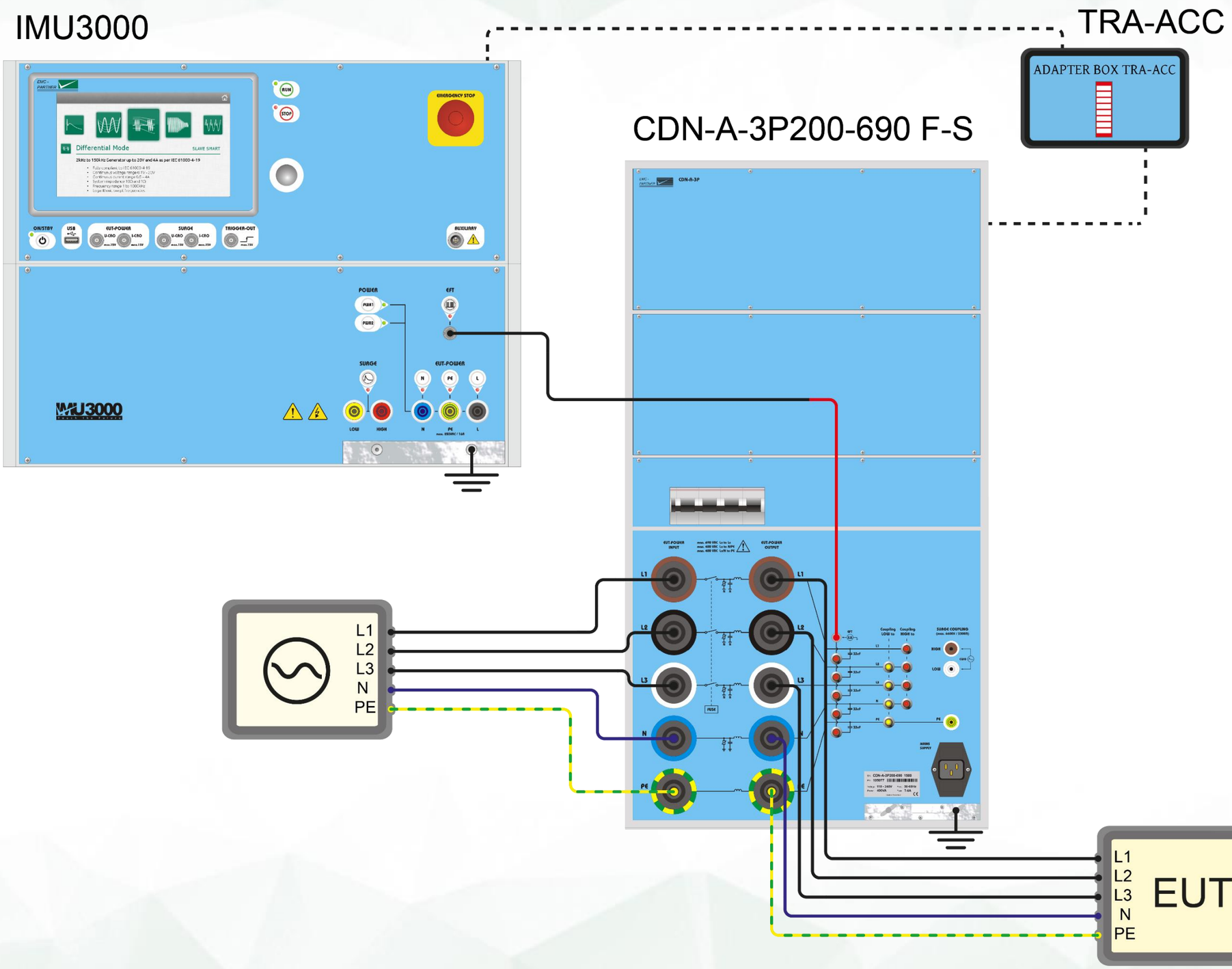

Coupling is set to Common Mode (L1+L2+L3+N+PE → Gnd).

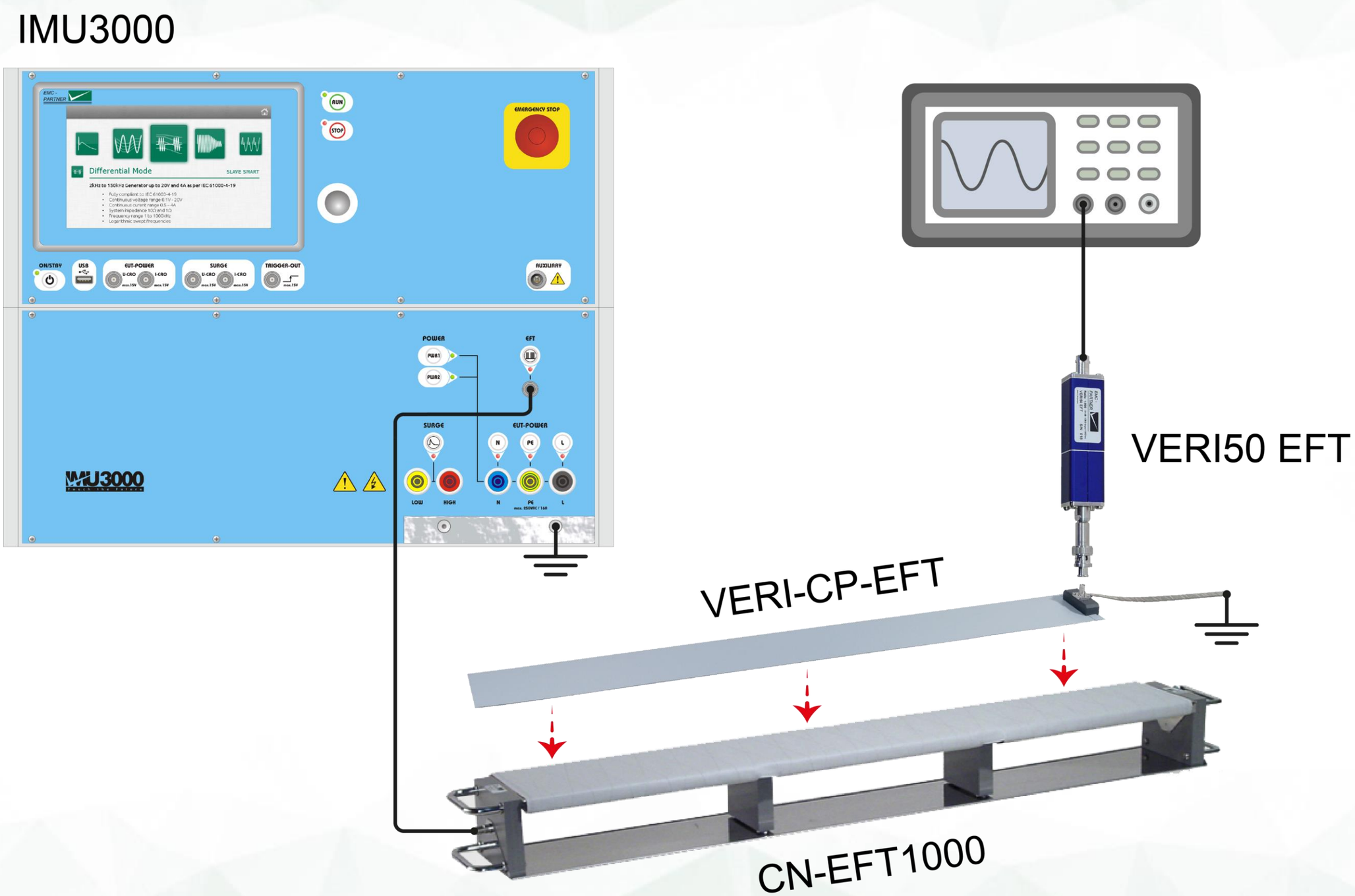

Only calibration with VERI50 EFT is required, calibration with VERI1K EFT does not apply.

1.2.17. EFT: IMU3000 F5/F6, CN-EFT1000 (suitable for testing all types of I/O lines), test setup

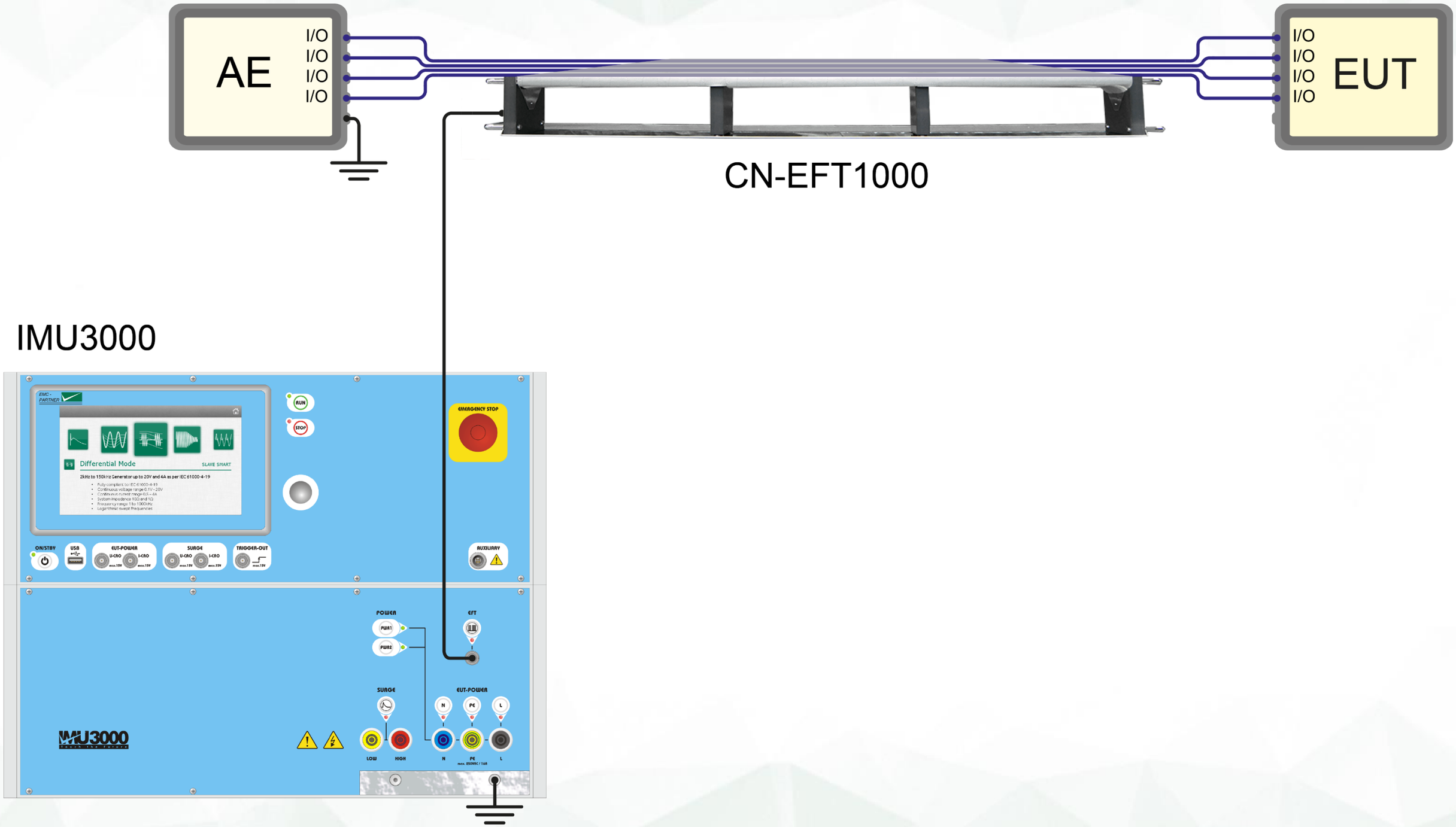

CN-EFT1000 is the only coupling element for burst signal on I/O lines.

1.2.18. EFT: IMU3000 F5/F6, CN-BALUN (differential mode test according to ANSI C37.90, ISO 7637-4), calibration setup

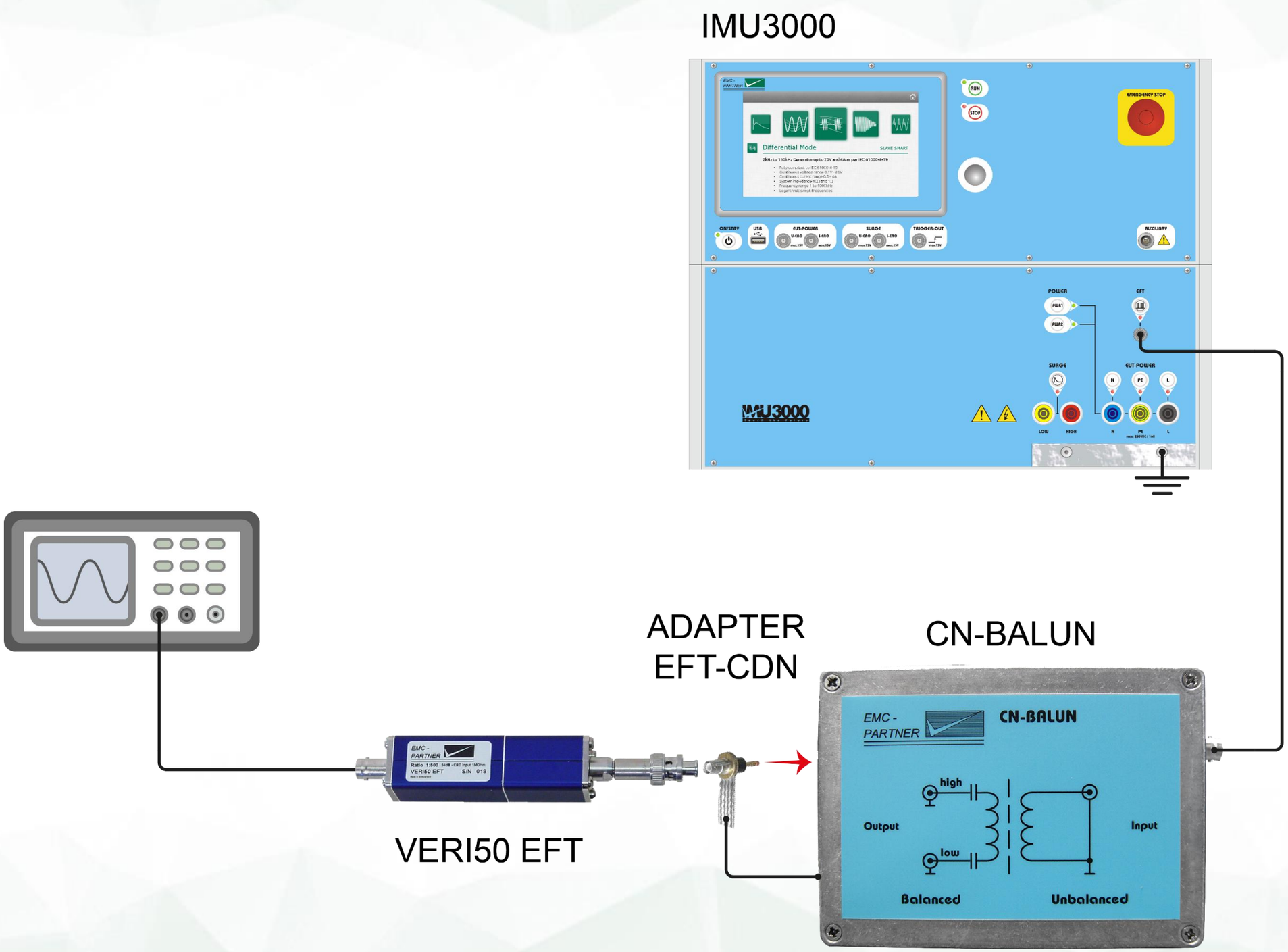

CN-BALUN is designed to apply burst in differential mode. This is not required in IEC 61000-4-2, but in ANSI C37.90 and future ISO 7637-4.

1.2.19. EFT: IMU3000 F5/F6, CN-BALUN (differential mode test according to ANSI C37.90, ISO 7637-4), test setup

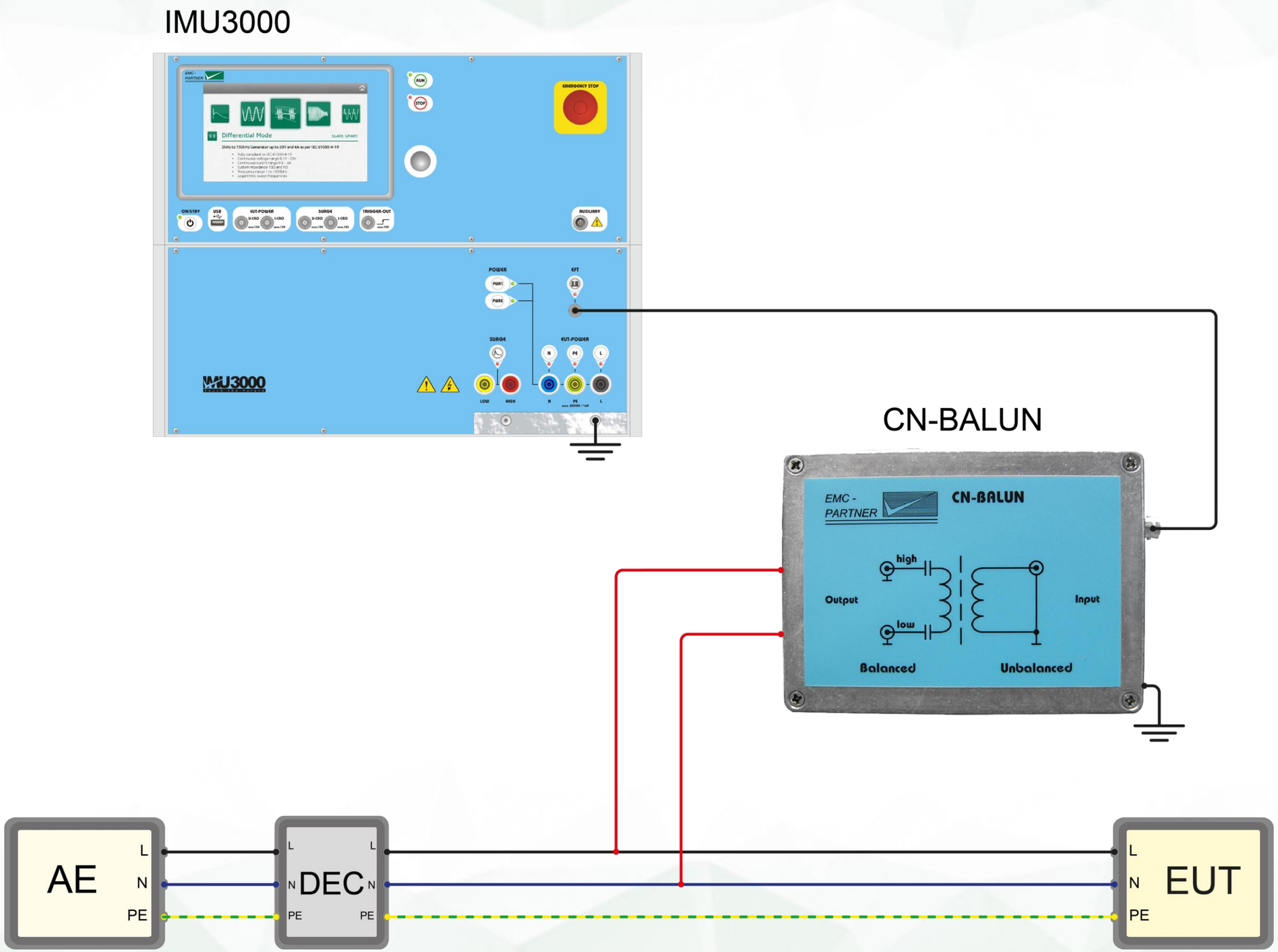

Decoupler could be a CDN like CDN2000-06-25. AE side could also be a supply.

1.2.20. EFT: IMU3000 F5/F6, EFT INSULATION, test setup

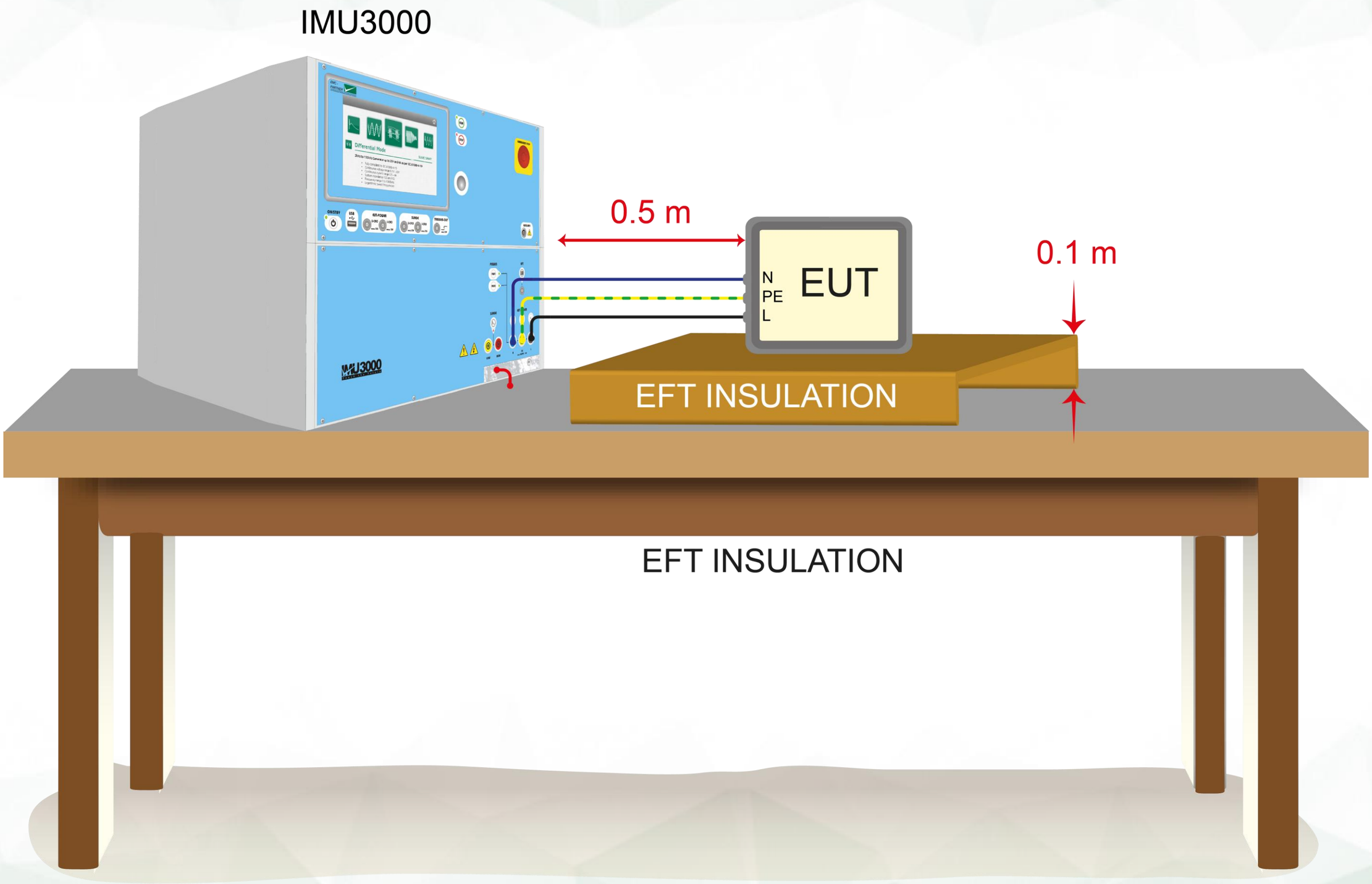

The product EFT insulation consists of two pieces insulation material to be placed between EUT and ground plane as per standard.

IEC 61000-4-5
Edition 3.0 / 2014

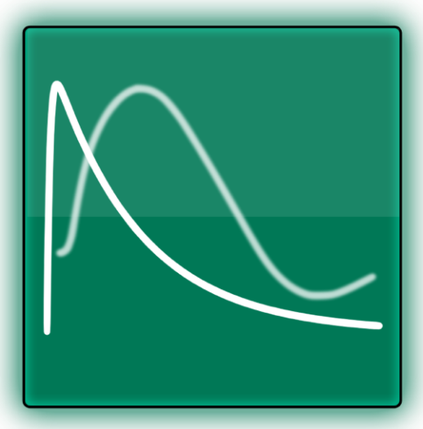

Changes from edition 2 to edition 3:

* Mathematical formula for the pulse
* Rationalization of impulse definition
* Impulse definition at CDN output
* Definition of common mode impulse
* 10/700 µs pulse moved to annex
* Decoupling inductors as function of current
* New high speed CDN proposal / alternative
* Measurement uncertainty

1.3.1. CWG: IMU3000 S/S6, direct output, voltage calibration setup

IMU3000

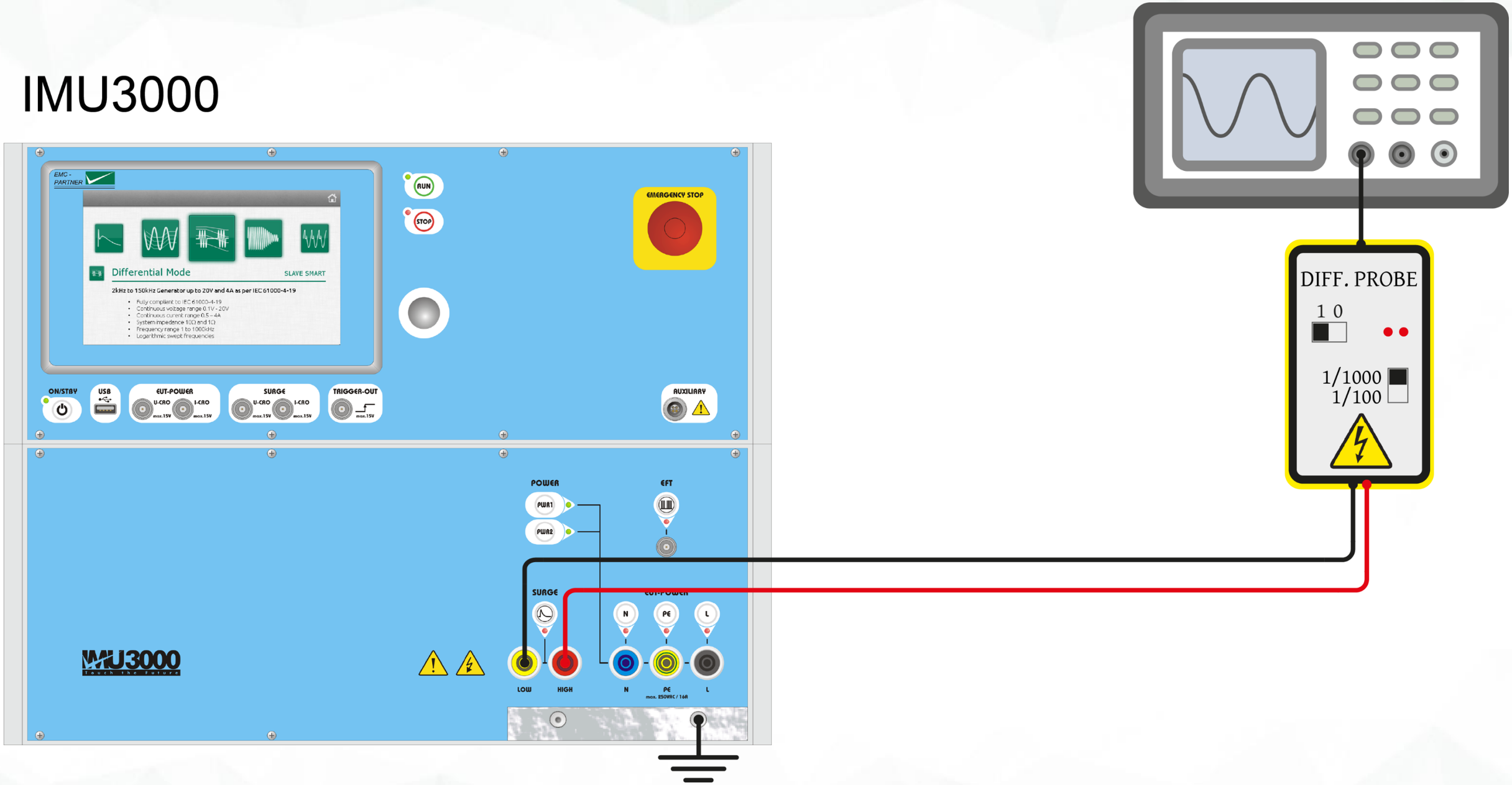

Direct output calibration does not require an additional 18 µF capacitor, it is built-in.

1.3.2. CWG: IMU3000 S/S6, direct output, current calibration setup

IMU3000

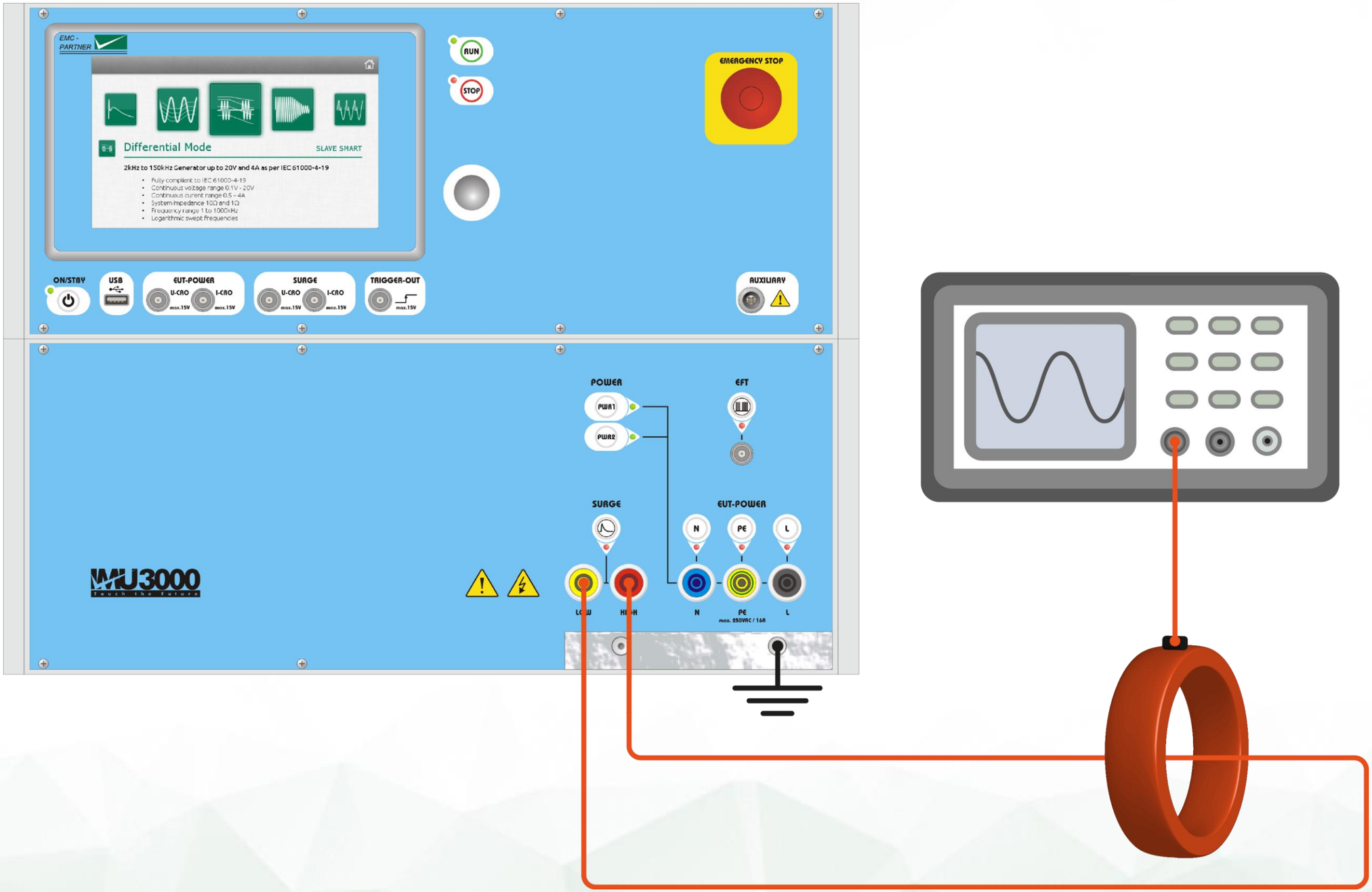

Direct output calibration does not require an additional 18 µF capacitor, it is built-in.

1.3.3. CWG: IMU3000 S/S6, direct output, test setup example: test on shielded I/O lines

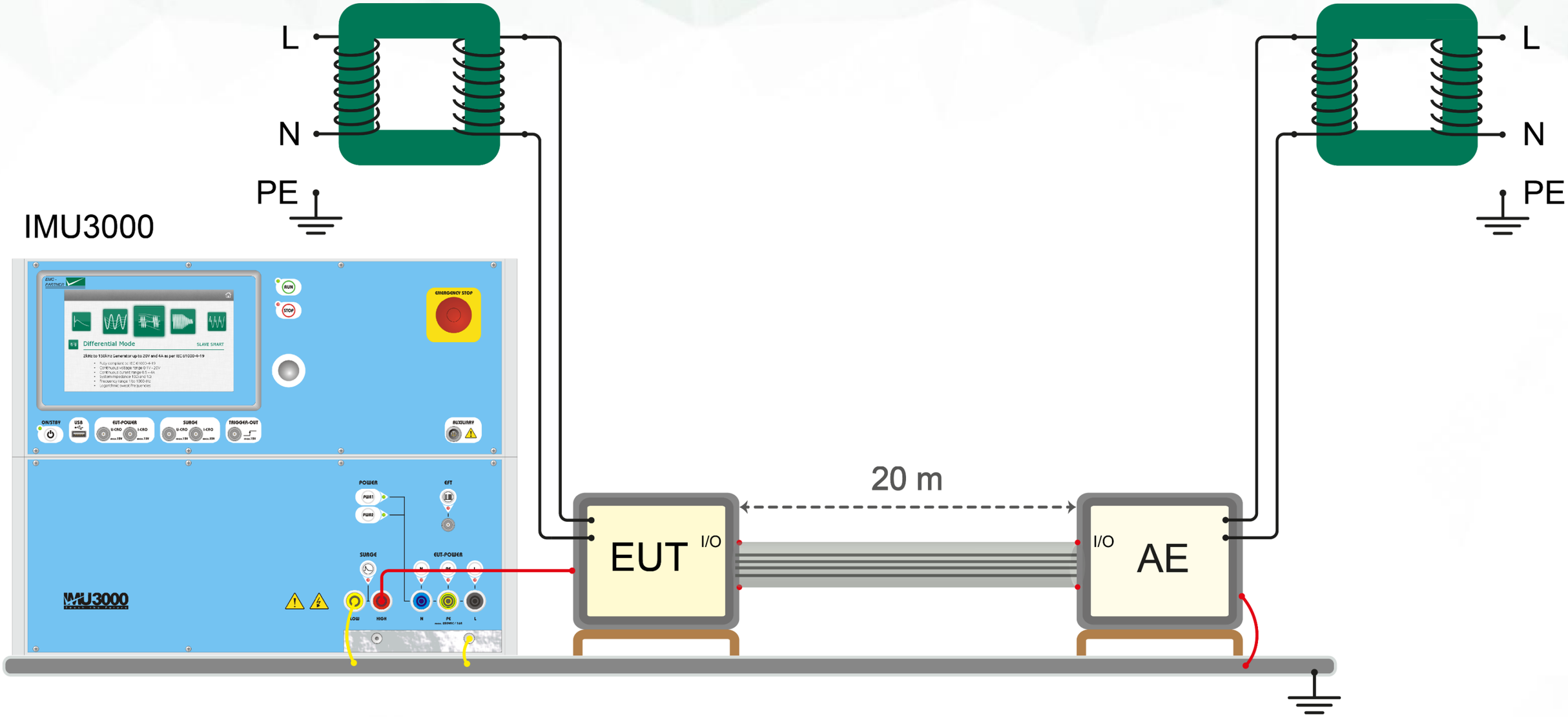

Shielded lines do not require a CDN for surge test, direct output is utilized. Supply of EUT and AE must be decoupled through transformers.

1.3.4. CWG: IMU3000 S/S6, internal CDN, voltage calibration setup

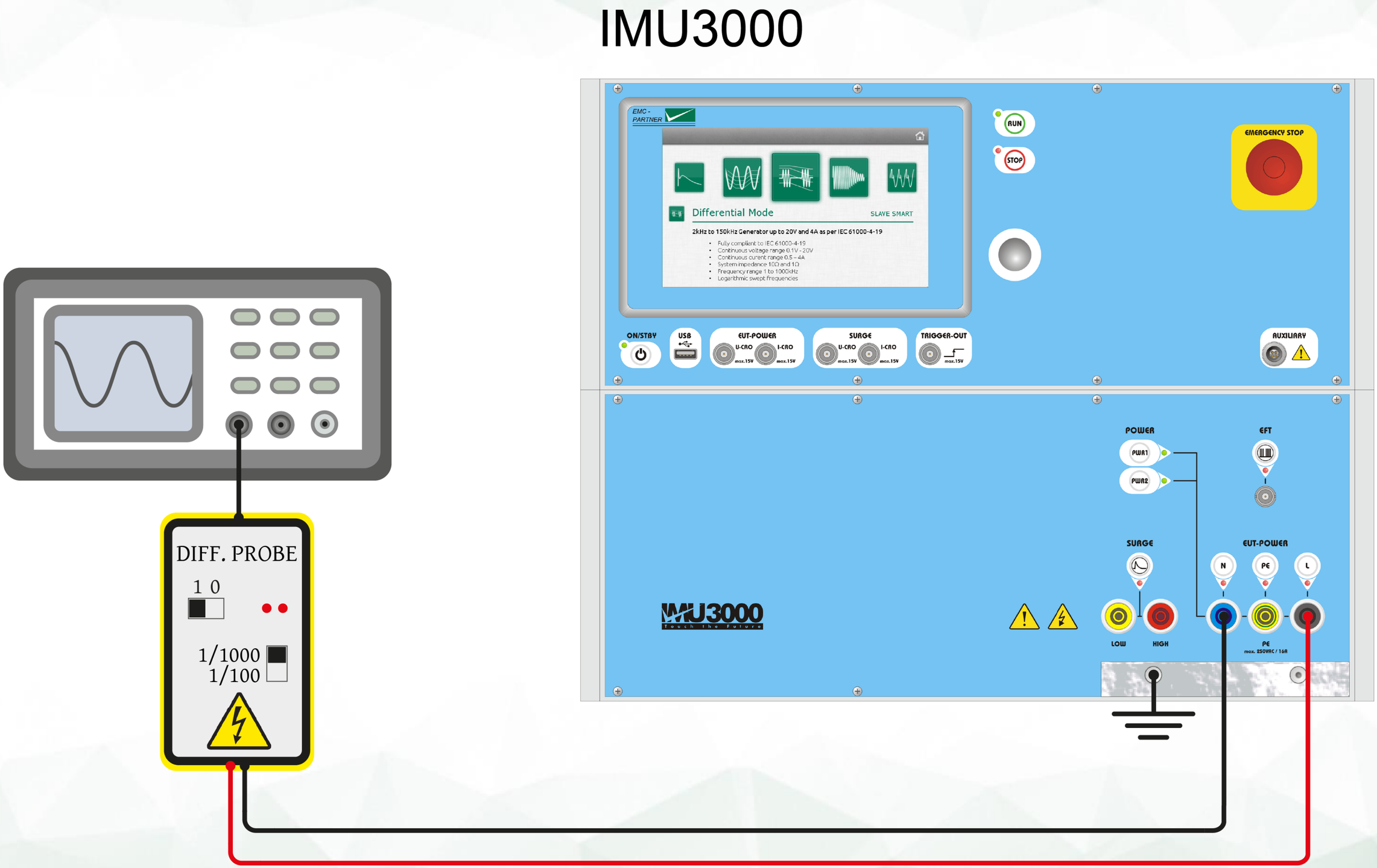

All coupling paths are calibrated successively.

1.3.5. CWG: IMU3000 S/S6, internal CDN, current calibration setup

IMU3000

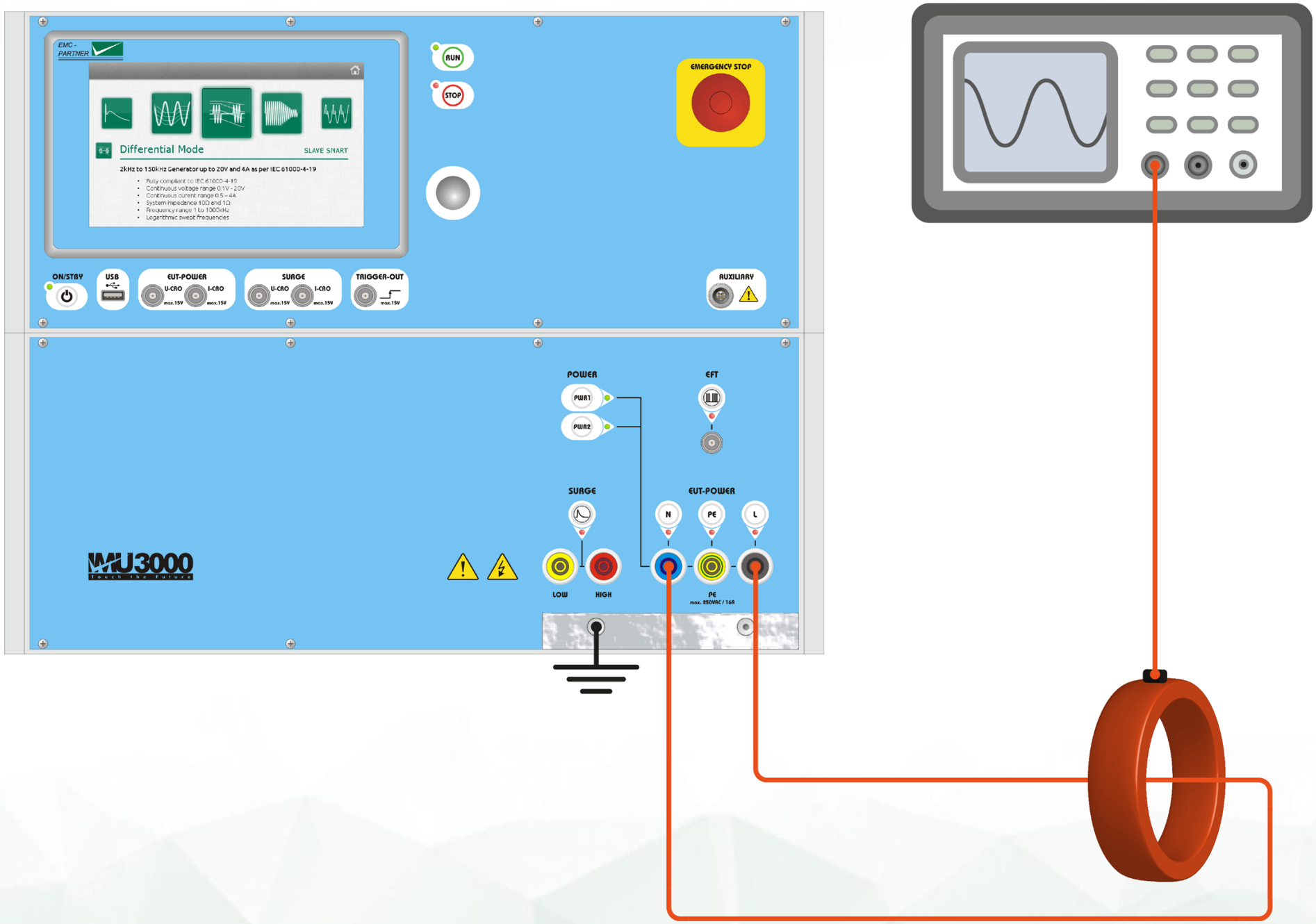

All coupling paths are calibrated successively.

1.3.6. CWG: IMU3000 S/S6, internal CDN, test setup

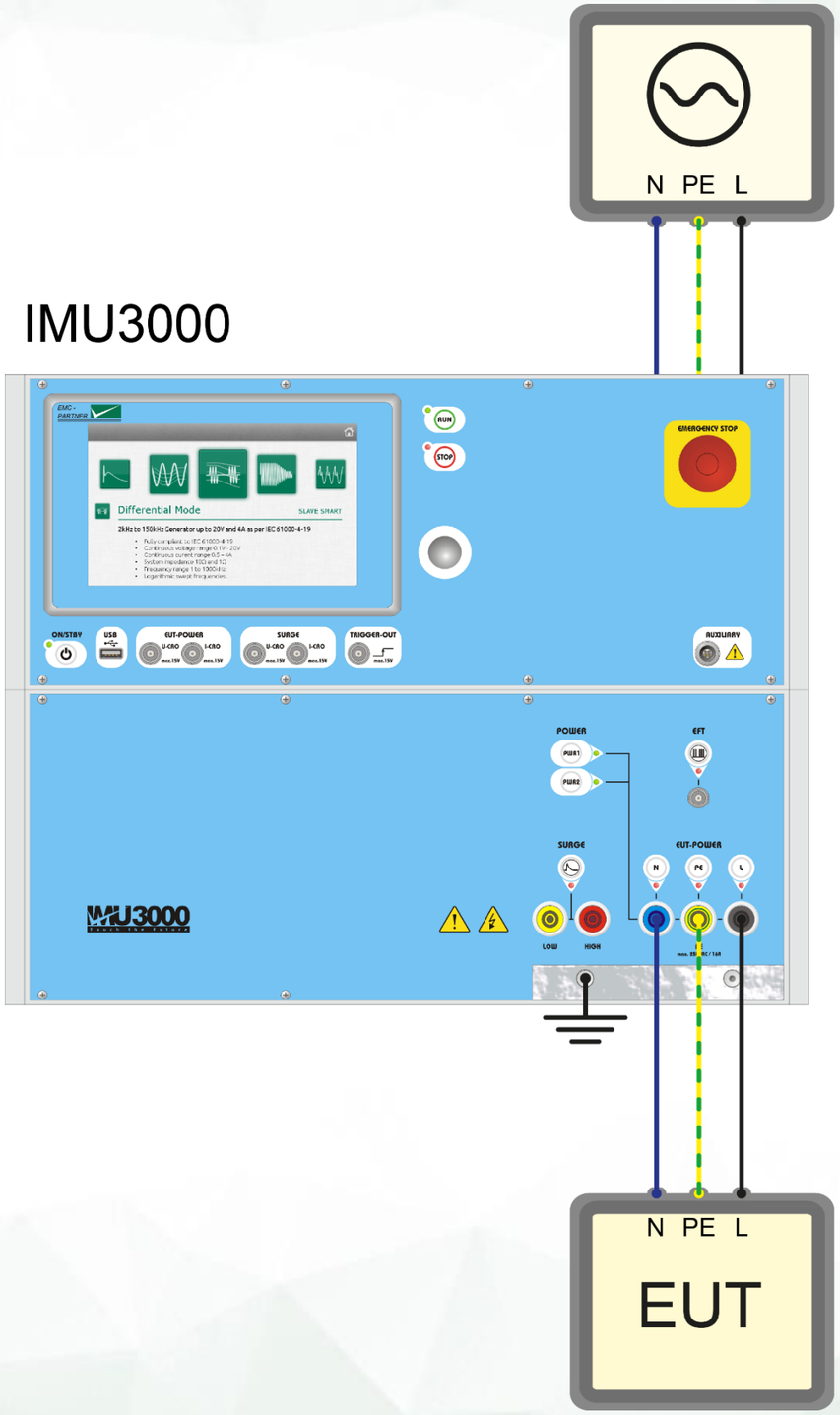

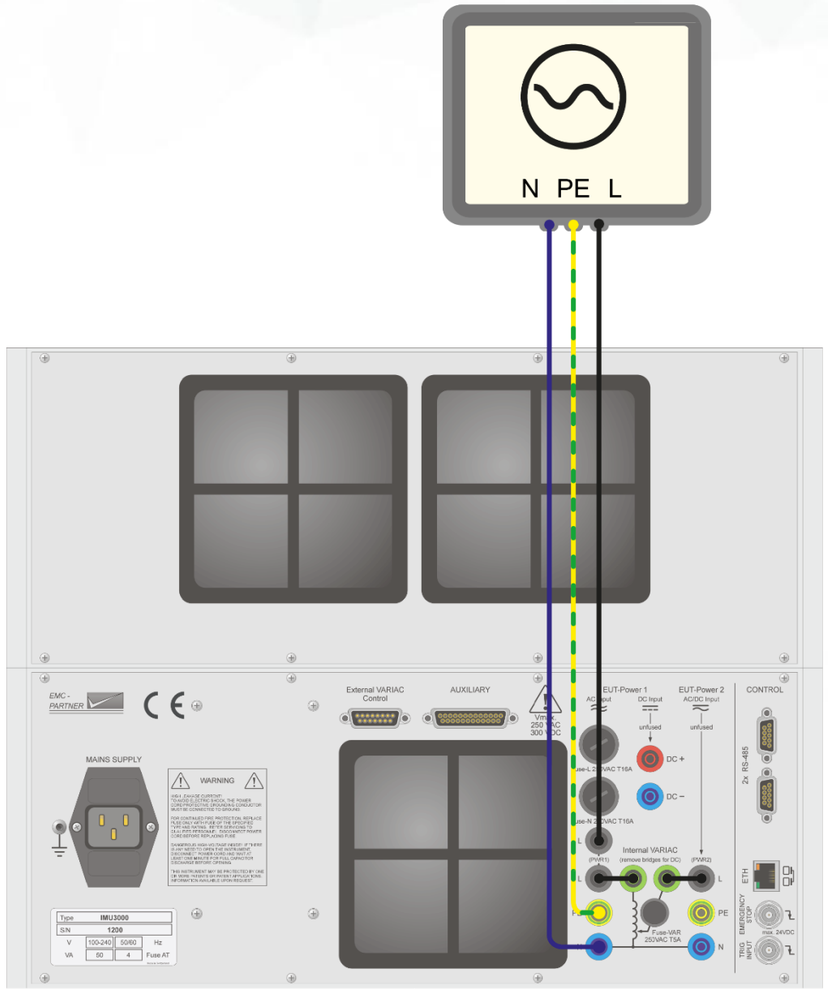

Internal CDN has built-in protection fuses on both L and N lines (16A), and Peak Check function can be used additionally.

1.3.7. CWG: IMU3000 S/S6, CDN2000-06-25 (or any three phase manual CDN), voltage calibration setup

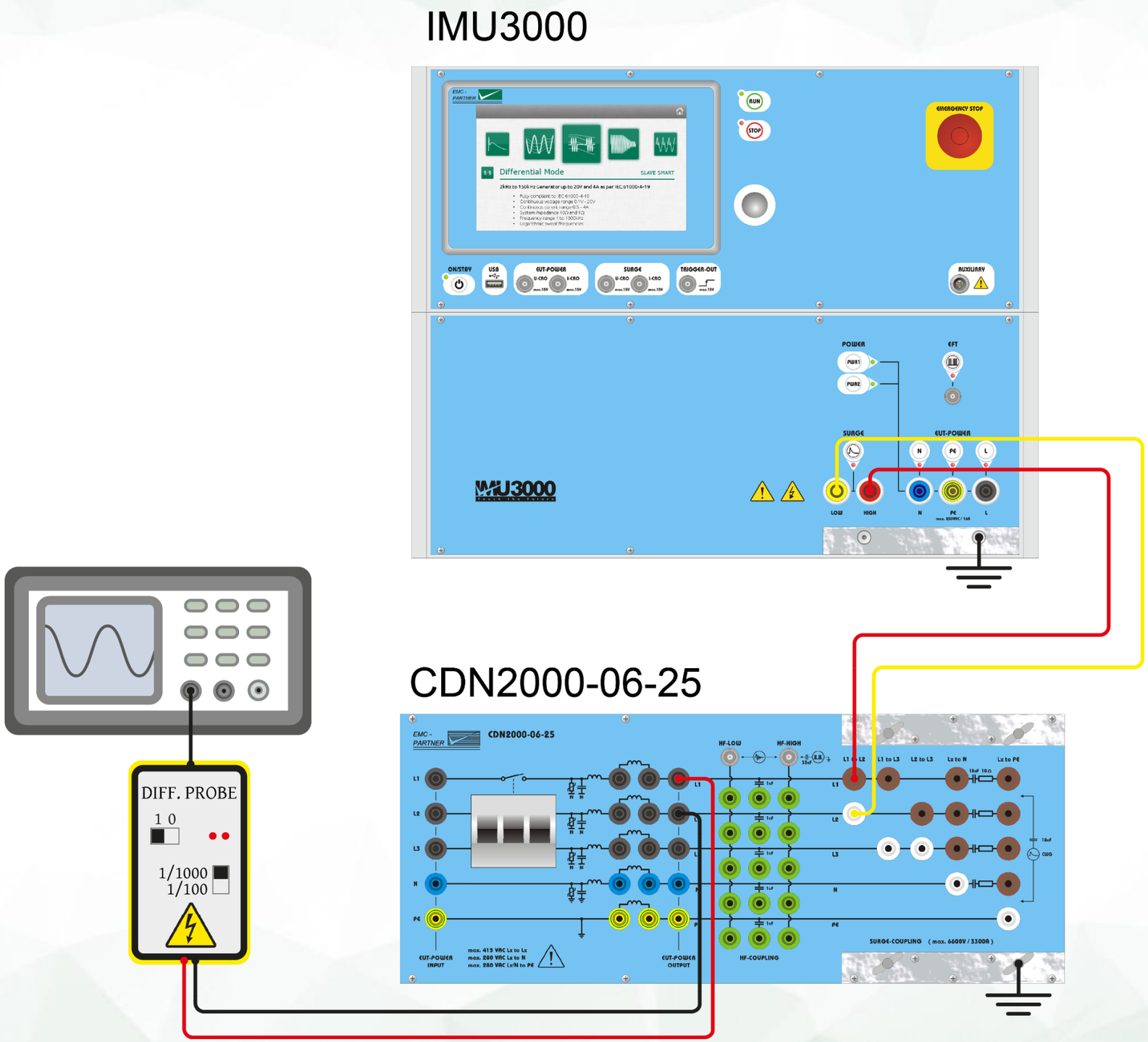

All coupling paths are calibrated successively.

1.3.8. CWG: IMU3000 S/S6, CDN2000-06-25 (or any three phase manual CDN), current calibration setup

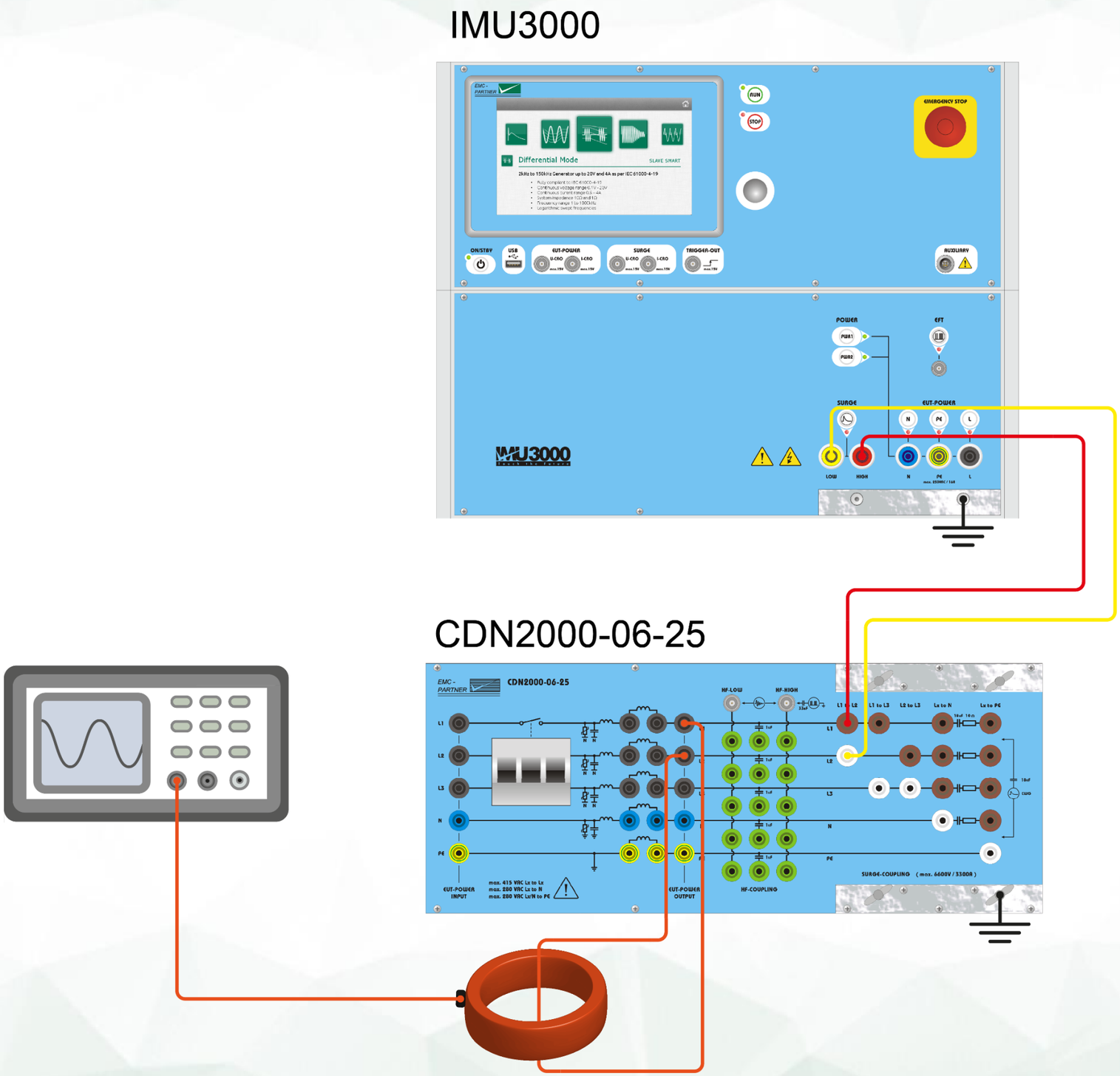

All coupling paths are calibrated successively.

1.3.9. CWG: IMU3000 S/S6, CDN2000-06-25 (or any three phase manual CDN), test setup

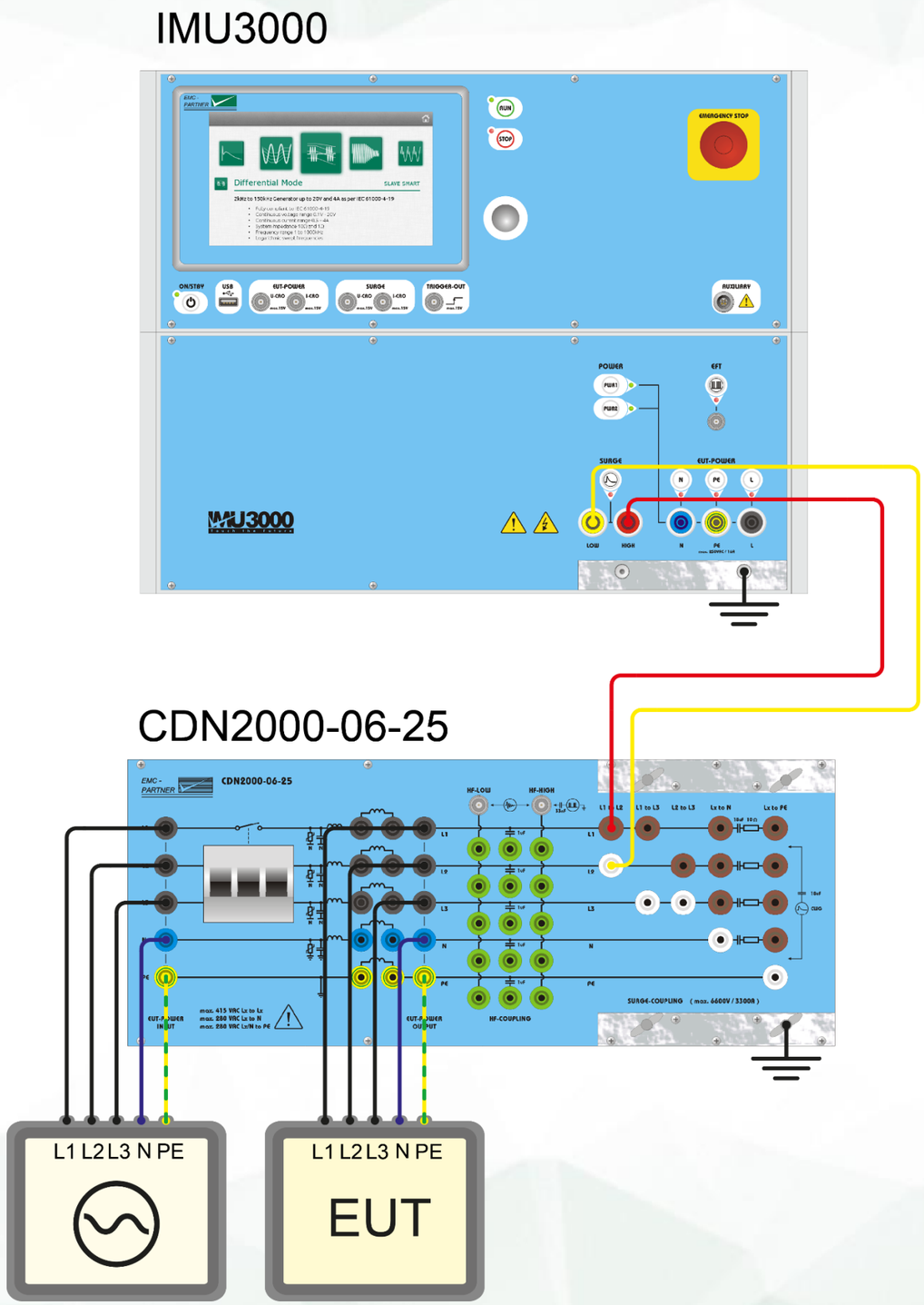

All EMC Partner external CDNs for supply lines have built-in automatic fuses.

1.3.10. CWG: IMU3000 S/S6, CDN3000A-06-32 (or any three phase automatic CDN 32 A and 63A), voltage calibration setup

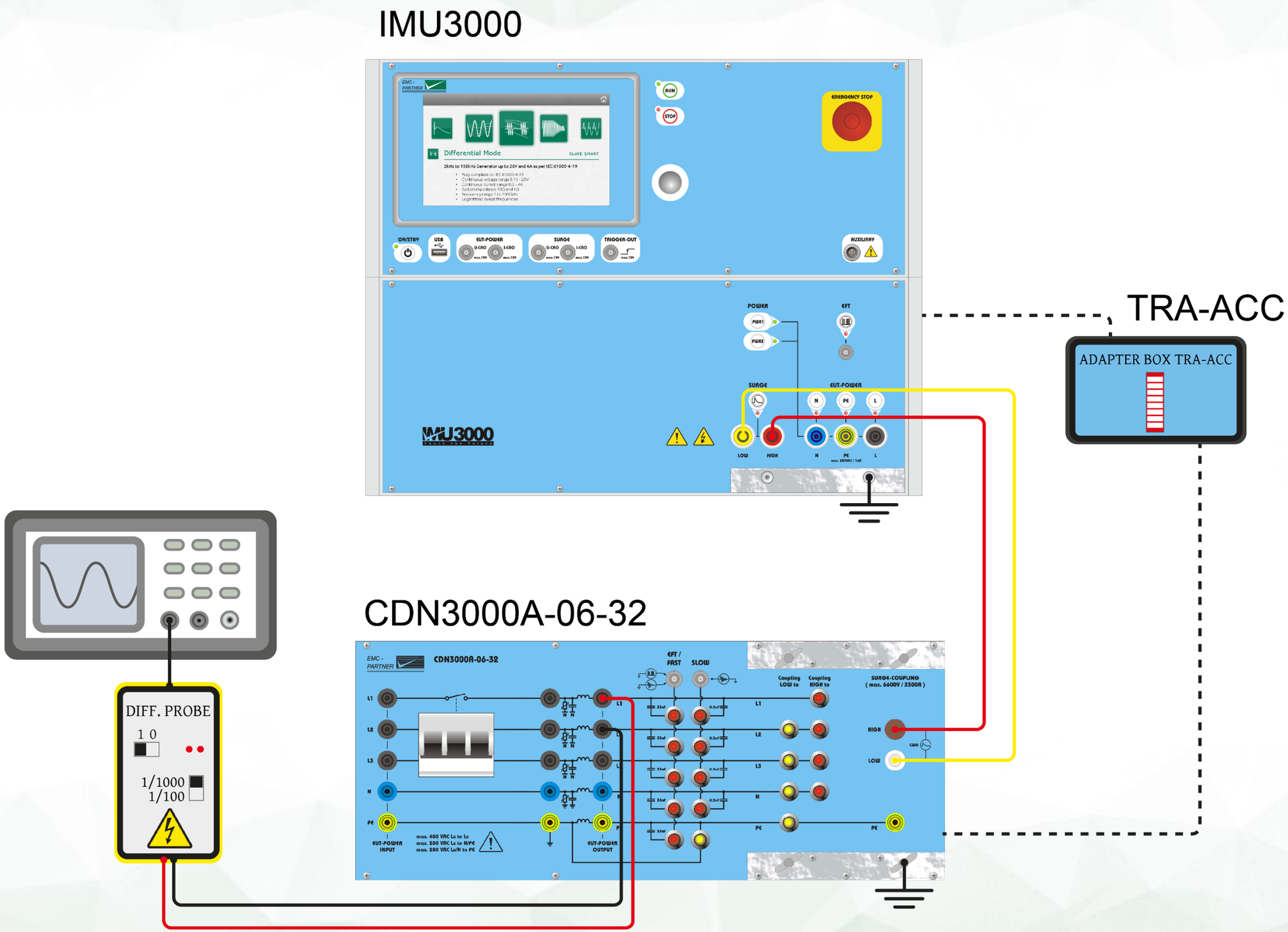

All coupling paths are calibrated successively.

1.3.11. CWG: IMU3000 S/S6, CDN3000A-06-32 (or any three phase automatic CDN 32A and 63 A), current calibration setup

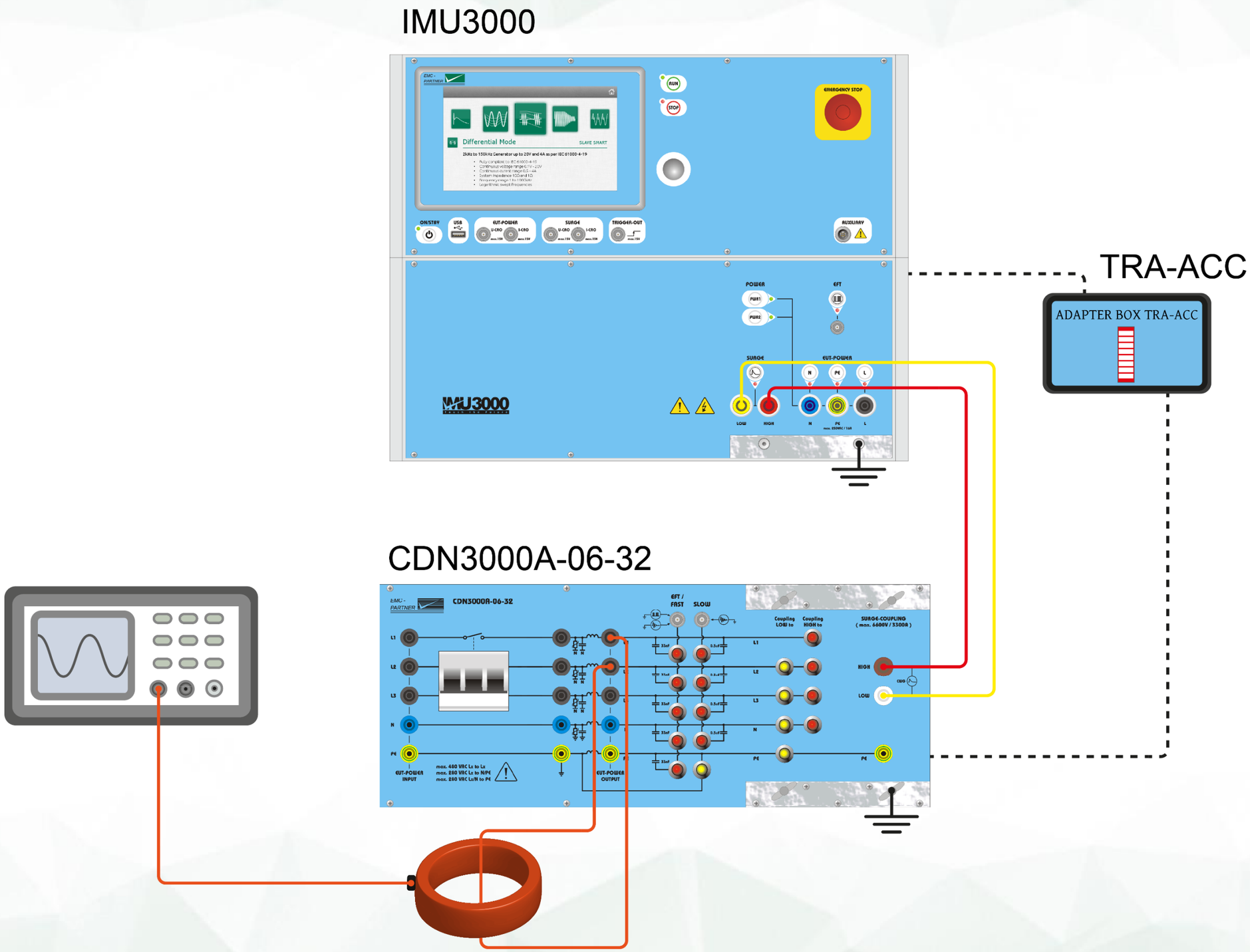

All coupling paths are calibrated successively.

1.3.12. CWG: IMU3000 S/S6, CDN3000A-06-32 (or any three phase automatic CDN 32A and 63 A), test setup

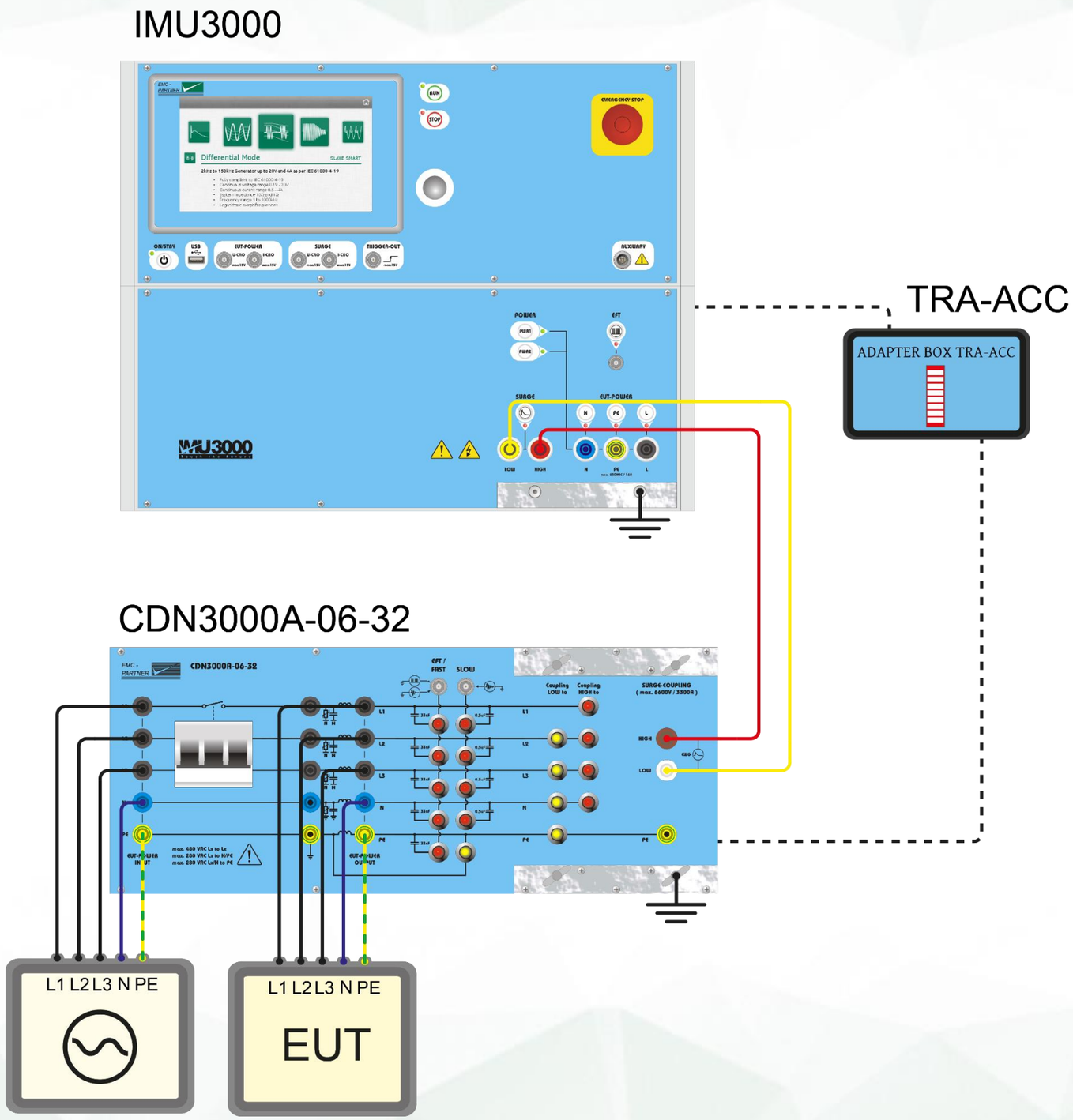

All EMC Partner external CDNs for supply lines have built-in automatic fuses.

1.3.13. CWG: IMU3000 S/S6, CDN-A-3P100-480 F-S (also 690V version), voltage calibration setup

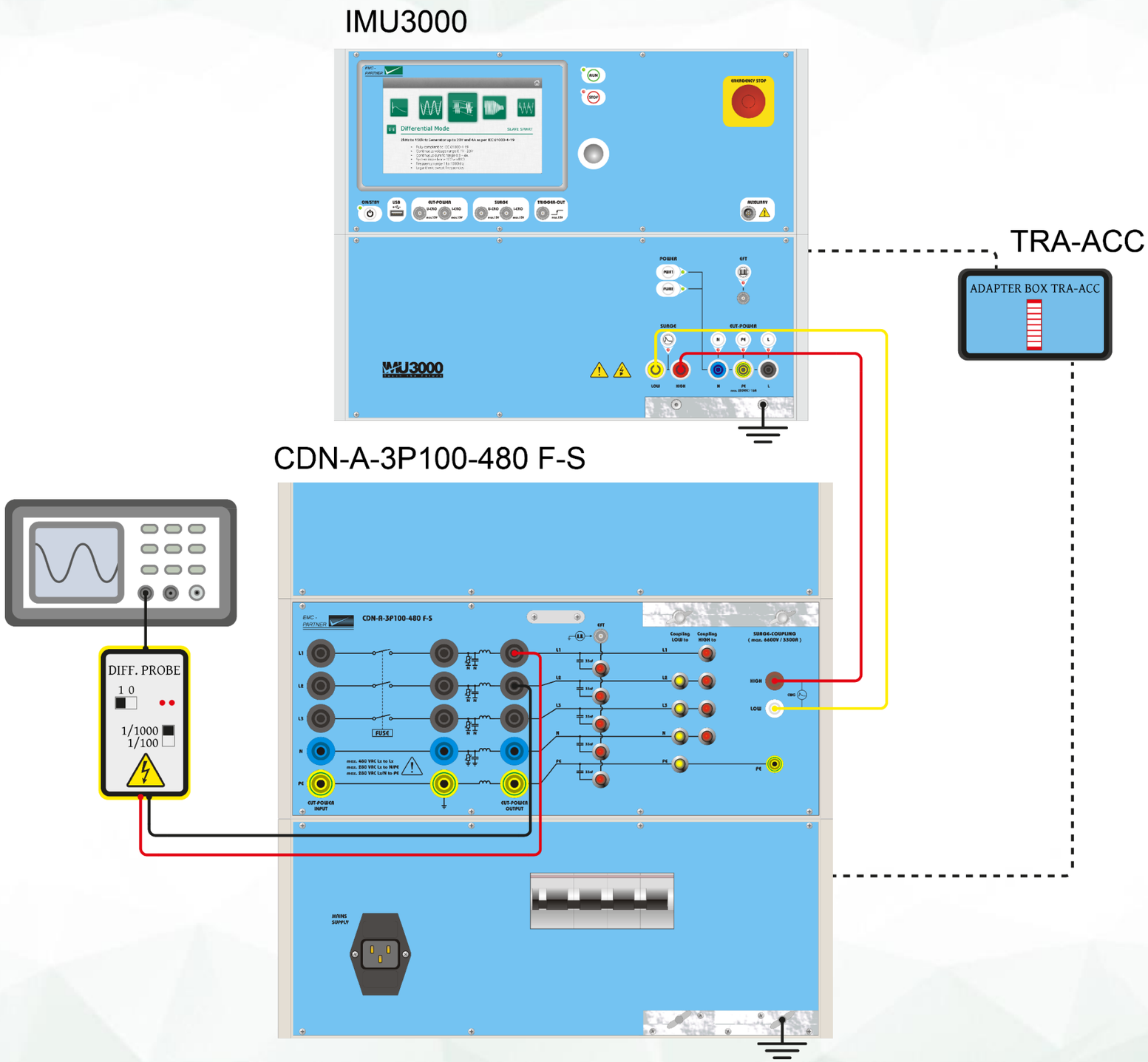

All coupling paths are calibrated successively.

1.3.14. CWG: IMU3000 S/S6, CDN-A-3P100-480 F-S (also 690V version), current calibration setup

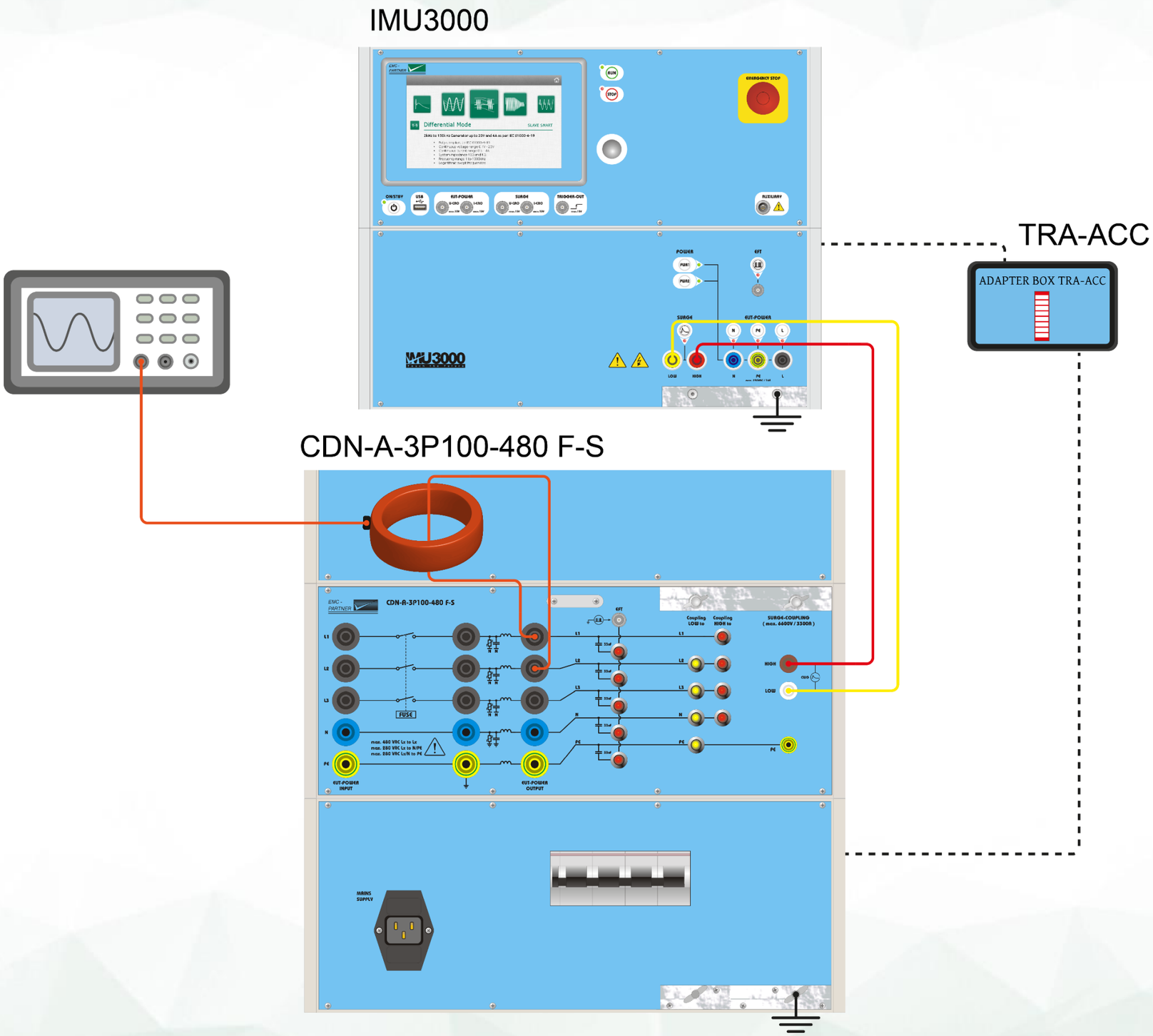

All coupling paths are calibrated successively.

1.3.15. CWG: IMU3000 S/S6, CDN-A-3P100-480 F-S (also 690V version), test setup

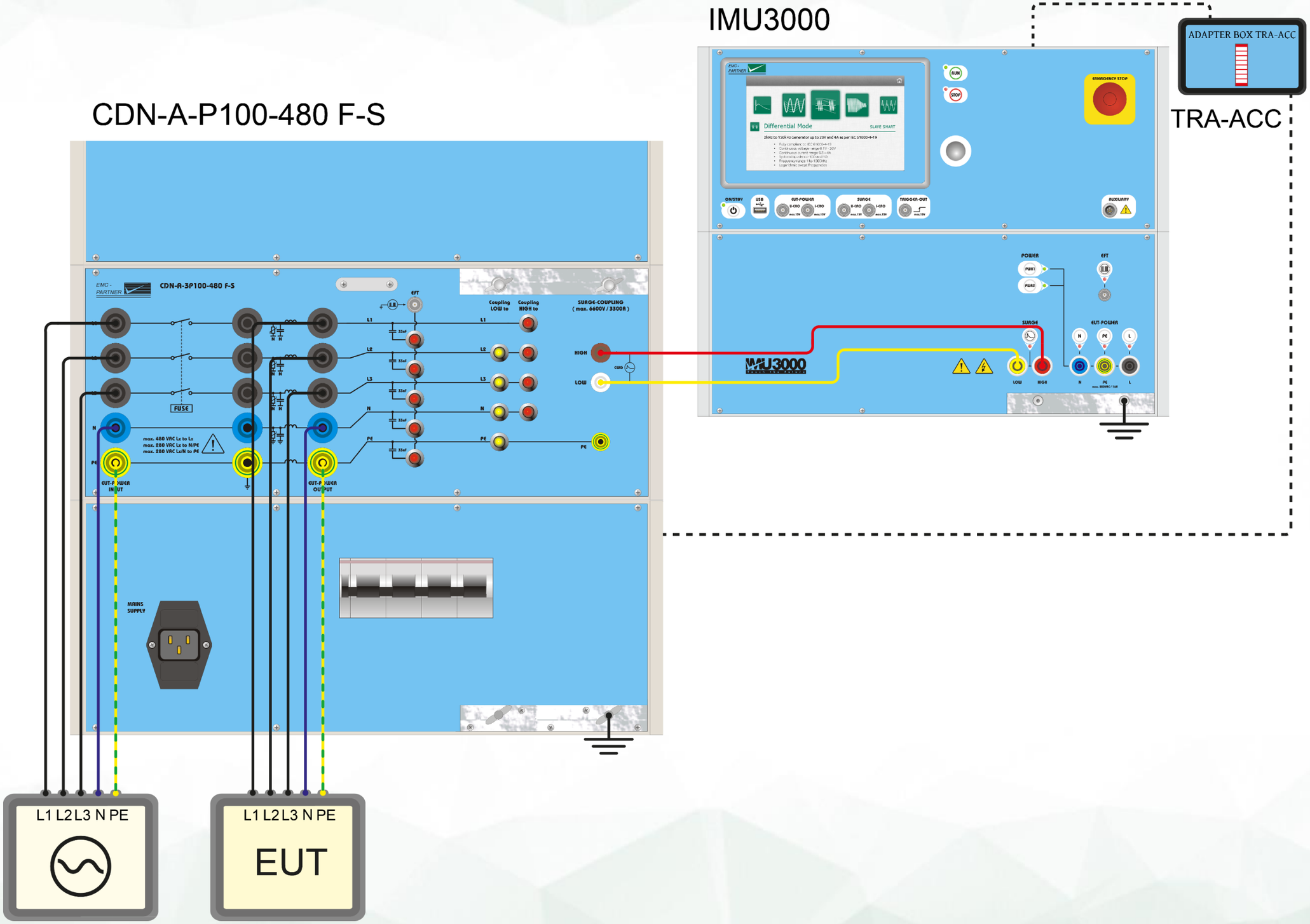

All EMC Partner external CDNs for supply lines have built-in automatic fuses.

1.3.16. CWG: IMU3000 S/S6, CDN-A-3P100-AC-DC, voltage calibration setup

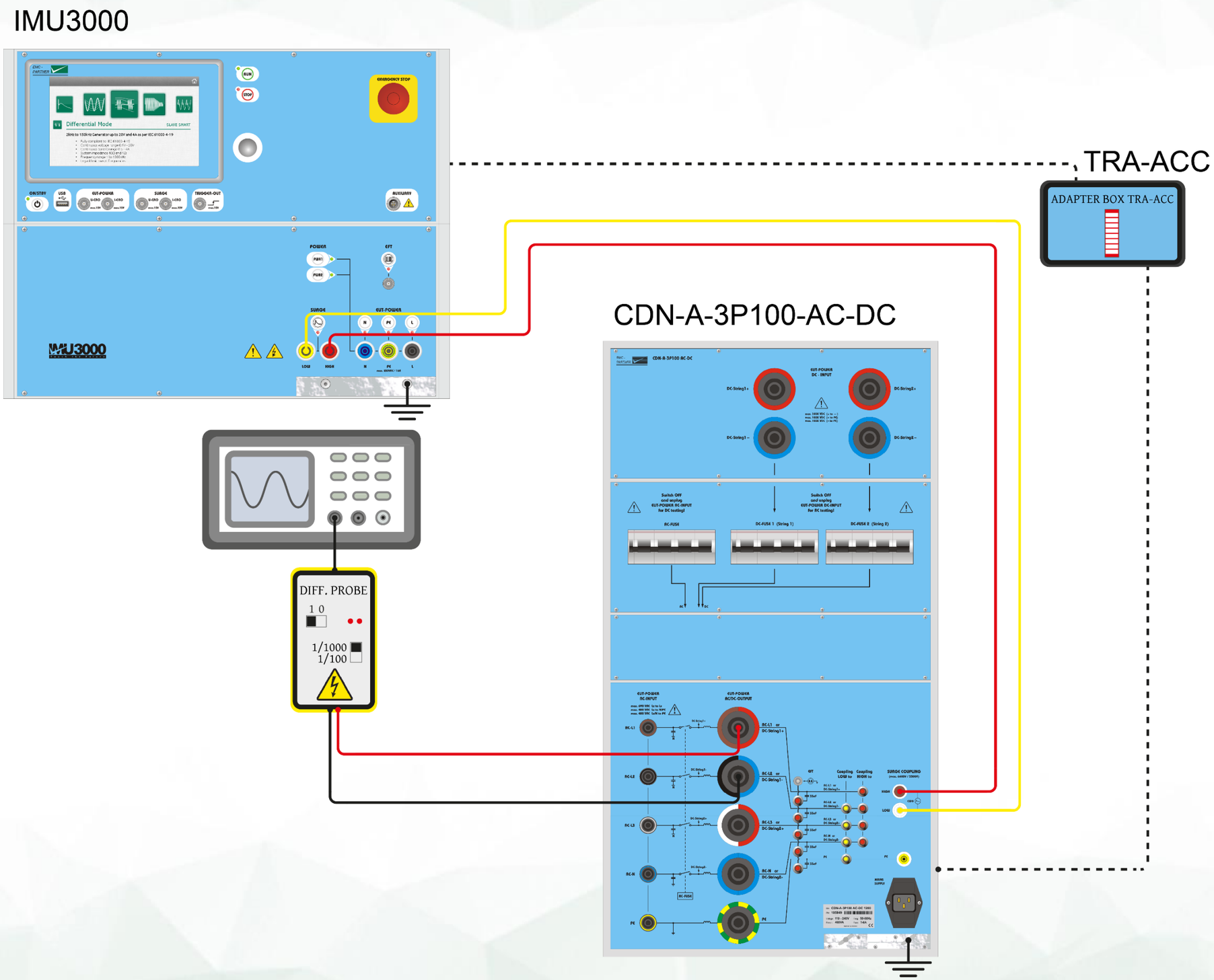

All coupling paths are calibrated successively.

1.3.17. CWG: IMU3000 S/S6, CDN-A-3P100-AC-DC, current calibration setup

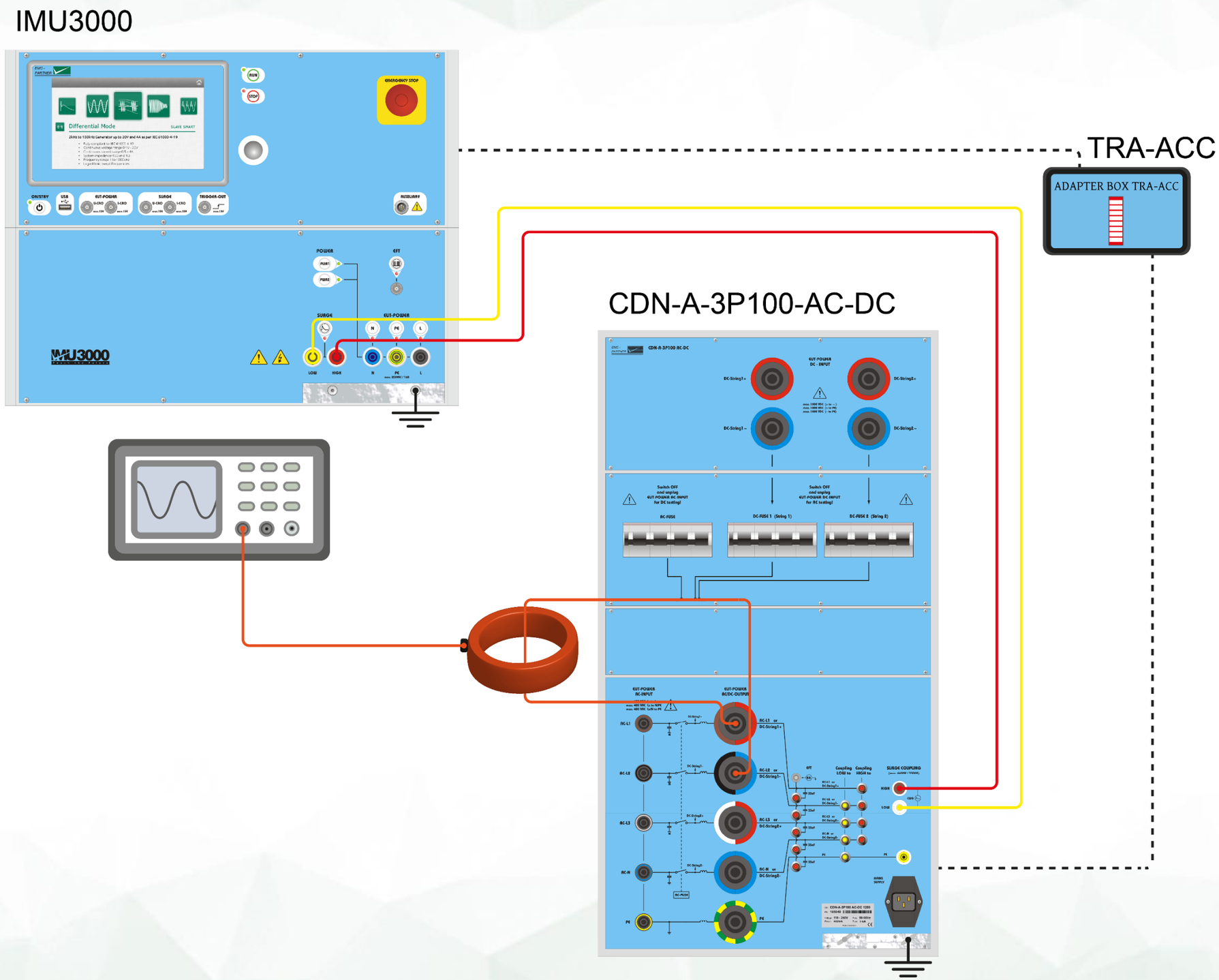

All coupling paths are calibrated successively.

1.3.18. CWG: IMU3000 S/S6, CDN-A-3P100-AC-DC, test setup DC side

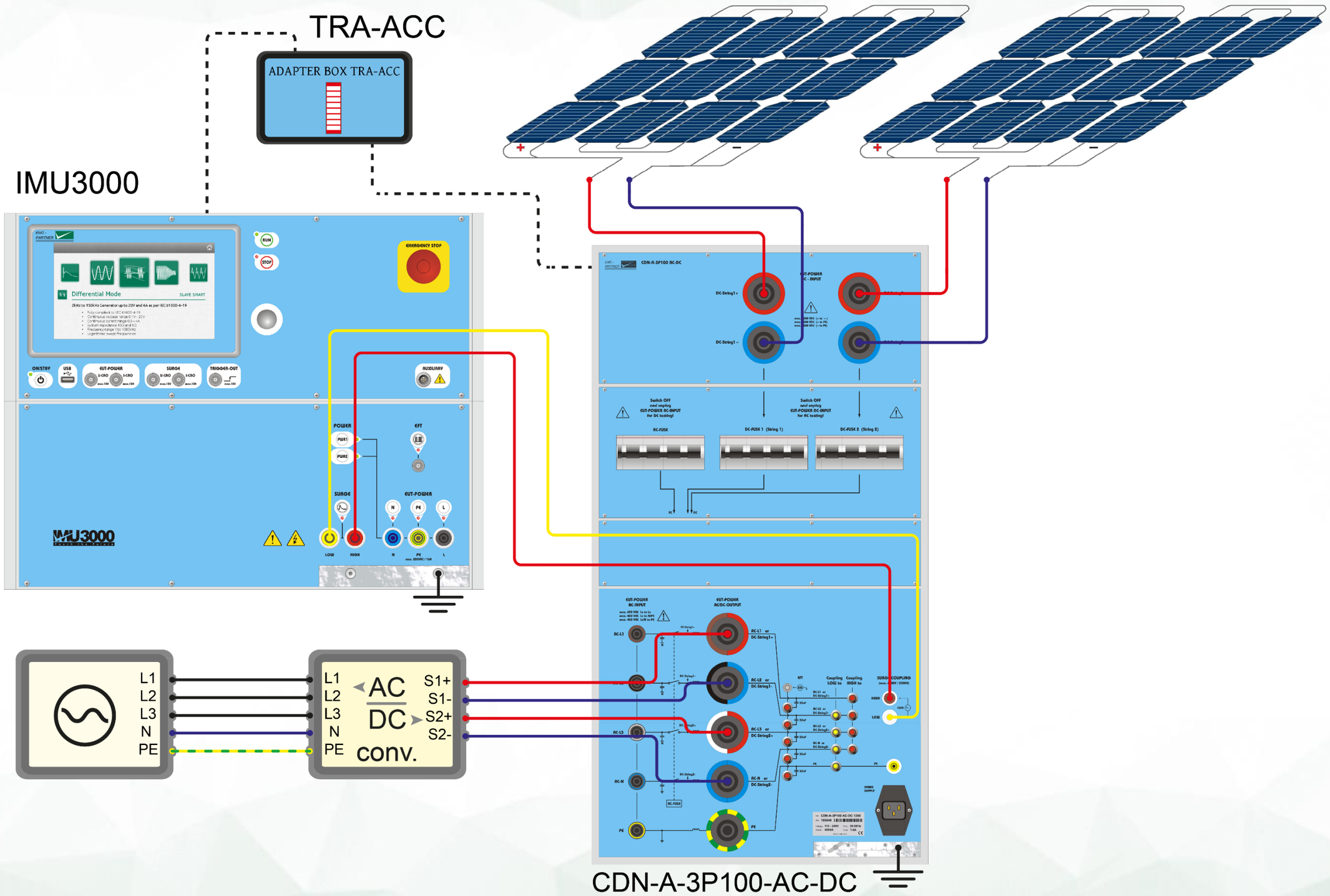

All EMC Partner external CDNs for supply lines have built-in automatic fuses.

1.3.19. CWG: IMU3000 S/S6, CDN-A-3P100-AC-DC, test setup AC side

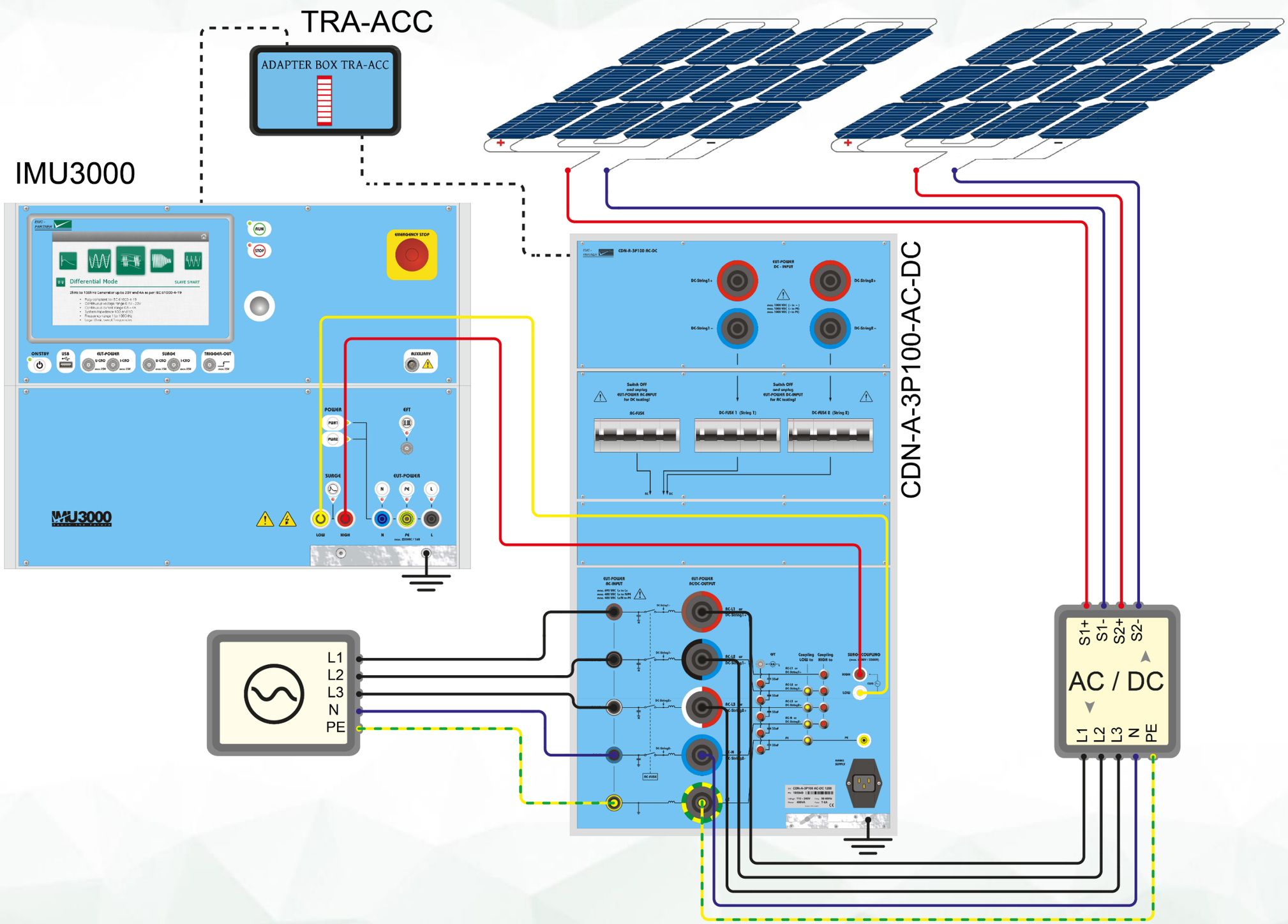

All EMC Partner external CDNs for supply lines have built-in automatic fuses.

1.3.20. CWG: IMU3000 S/S6, CDN-A-3P200-480 F-S (also 690V version), voltage calibration setup

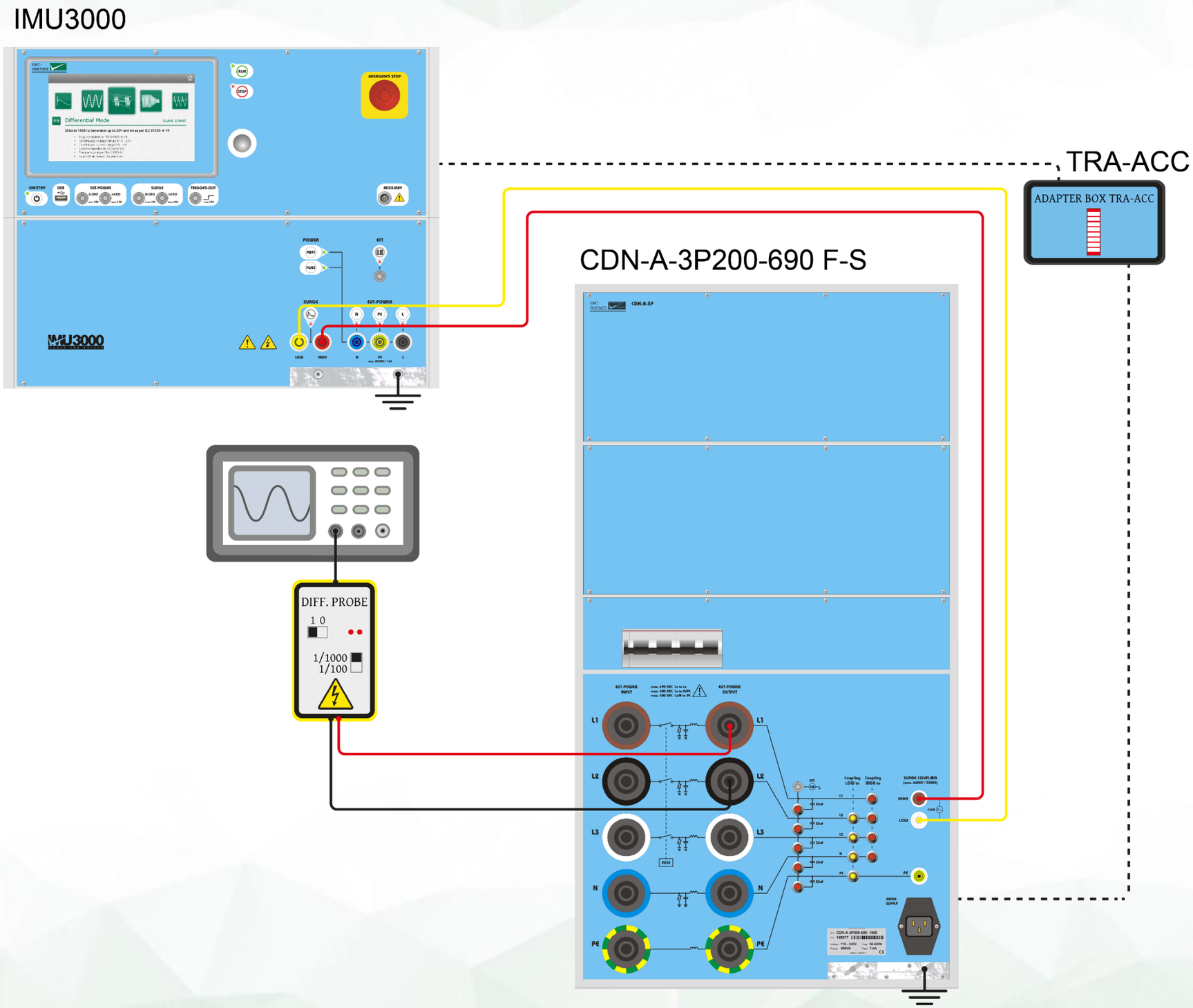

All coupling paths are calibrated successively.

1.3.21. CWG: IMU3000 S/S6, CDN-A-3P200-480 F-S (also 690V version), current calibration setup

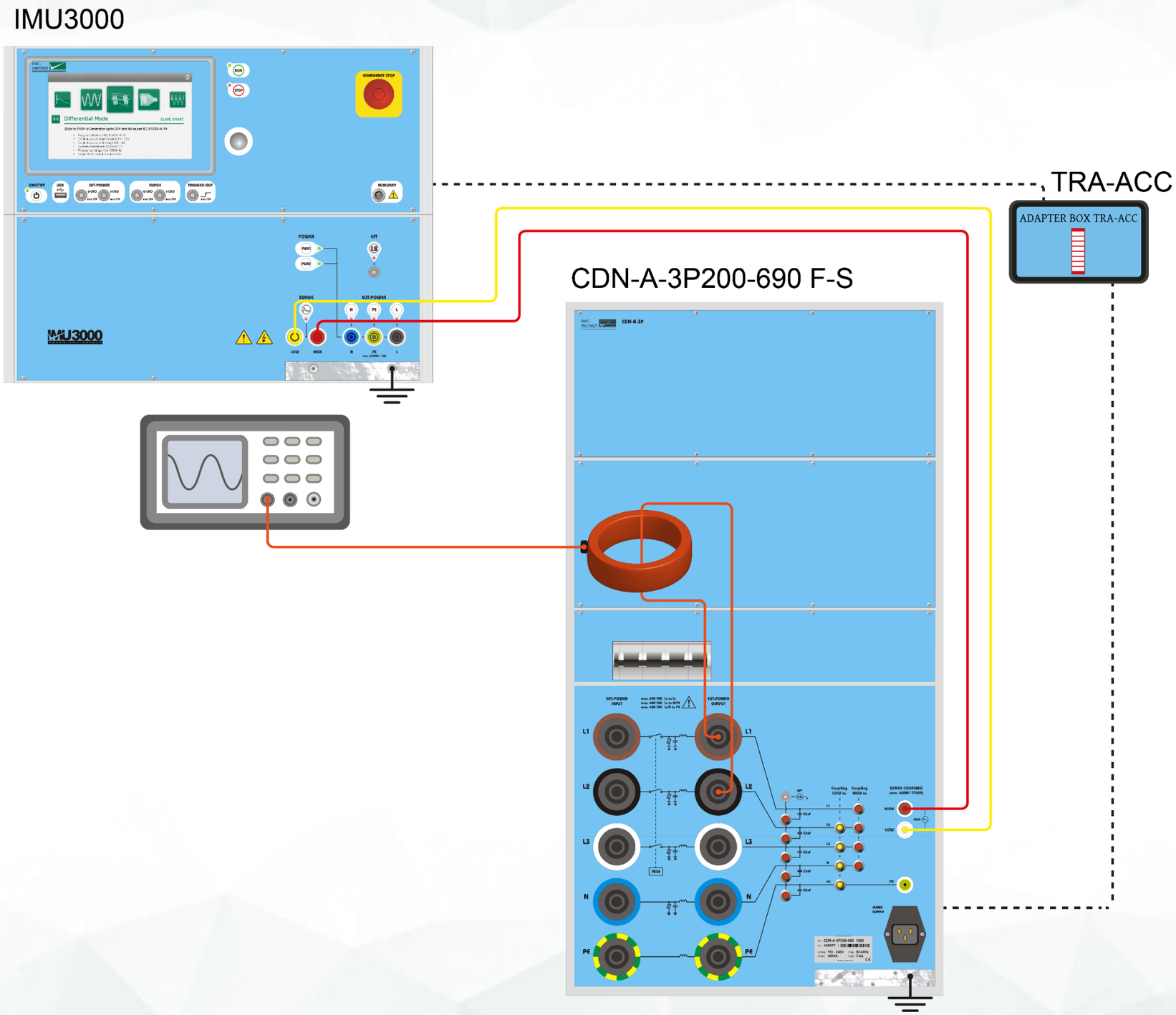

All coupling paths are calibrated successively.

1.3.22. CWG: IMU3000 S/S6, CDN-A-3P200-480 F-S (also 690V version), test setup

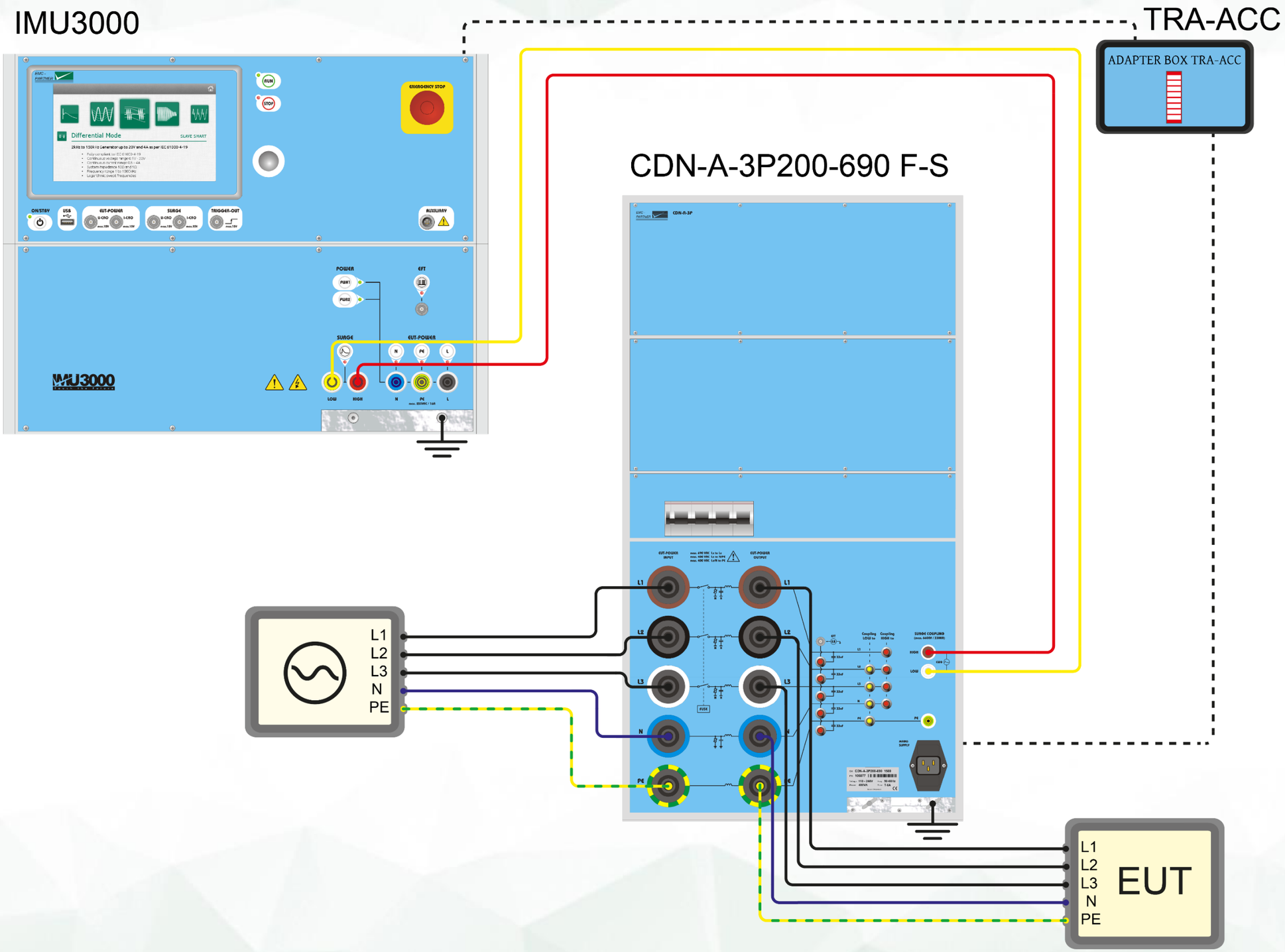

All EMC Partner external CDNs for supply lines have built-in automatic fuses.

1.3.23. CWG: IMU3000 S/S6, CDN-KIT1000 ED3, voltage calibration setup

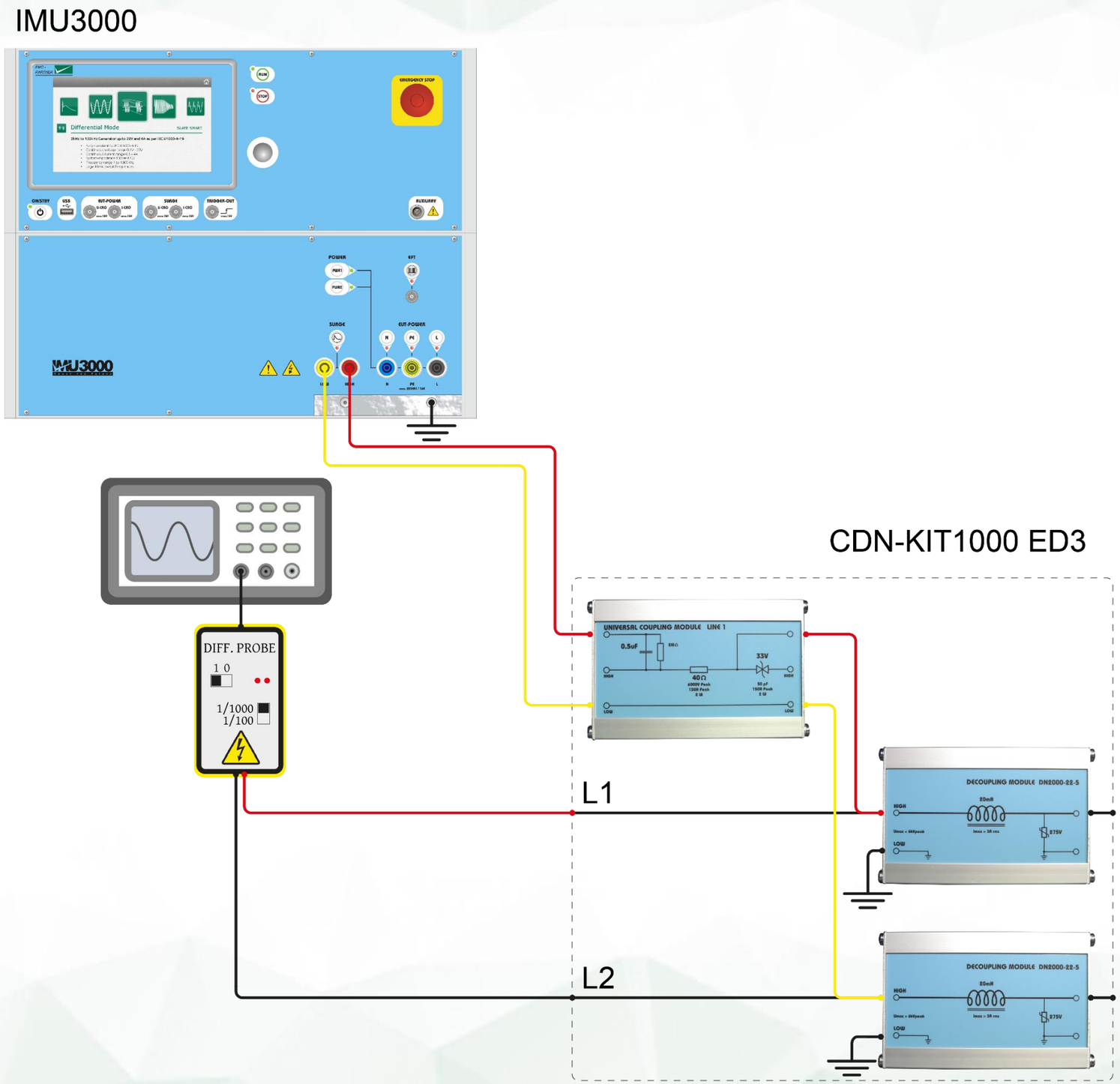

All coupling paths are calibrated successively, L1-L2, L1-Gnd, L2-Gnd.

1.3.24. CWG: IMU3000 S/S6, CDN-KIT1000 ED3, current calibration setup

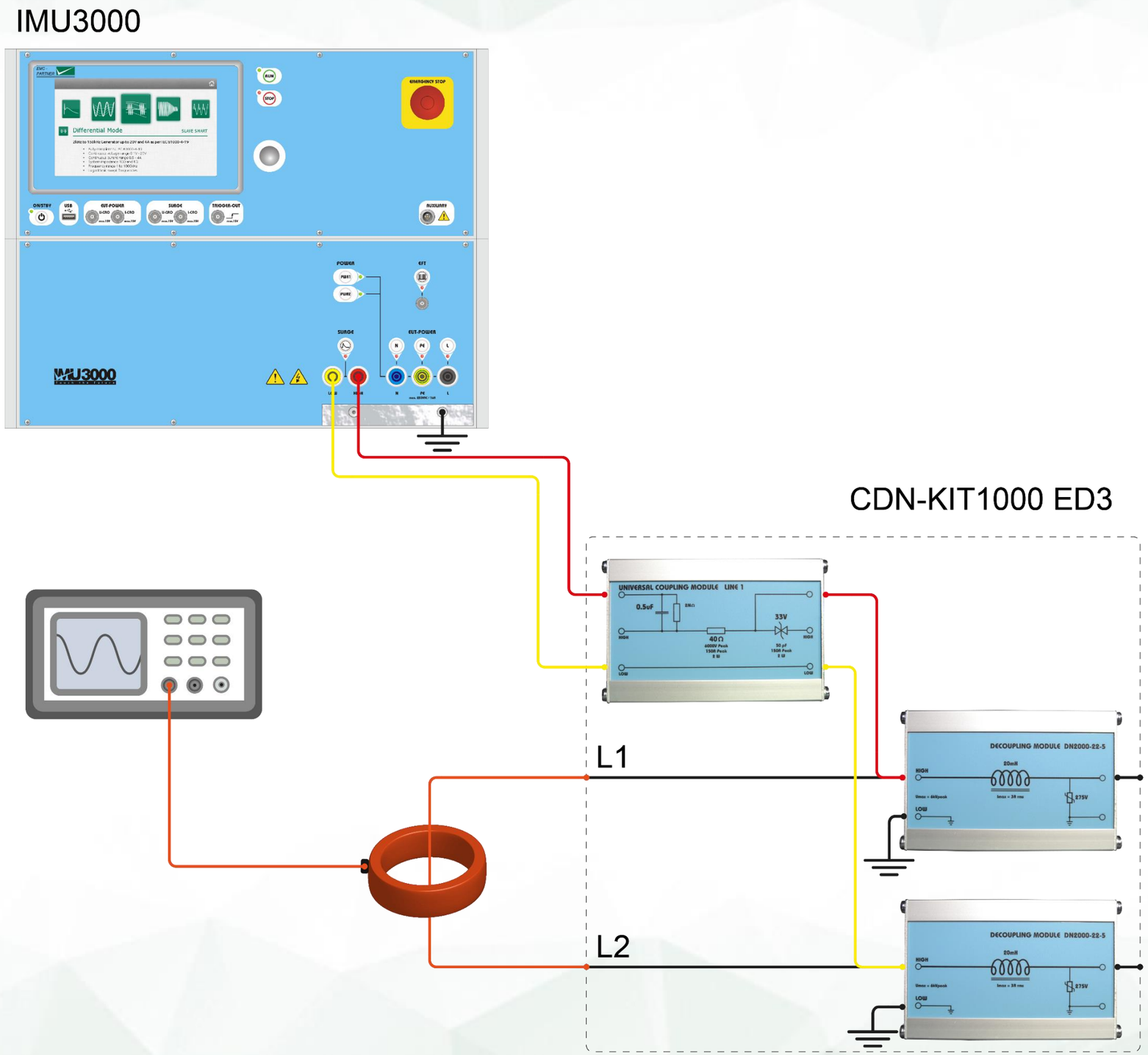

All coupling paths are calibrated successively, L1-L2, L1-Gnd, L2-Gnd.

1.3.25. CWG: IMU3000 S/S6, CDN-KIT1000 ED3, test setup

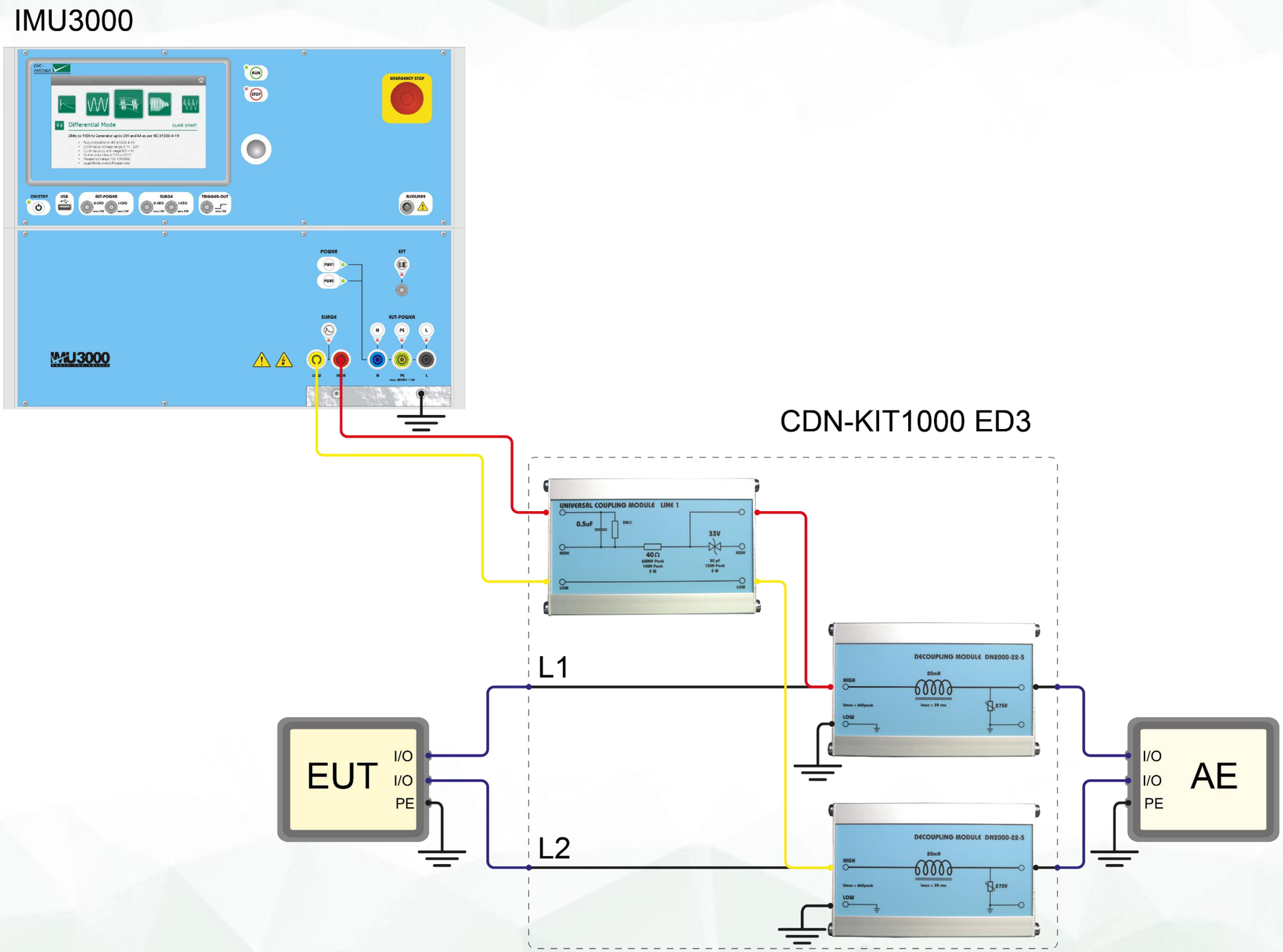

Coupling element can be selected: capacitor or bipolar diode.

1.3.26. CWG: IMU3000 S/S6, CDN-DATA-4L, voltage calibration setup

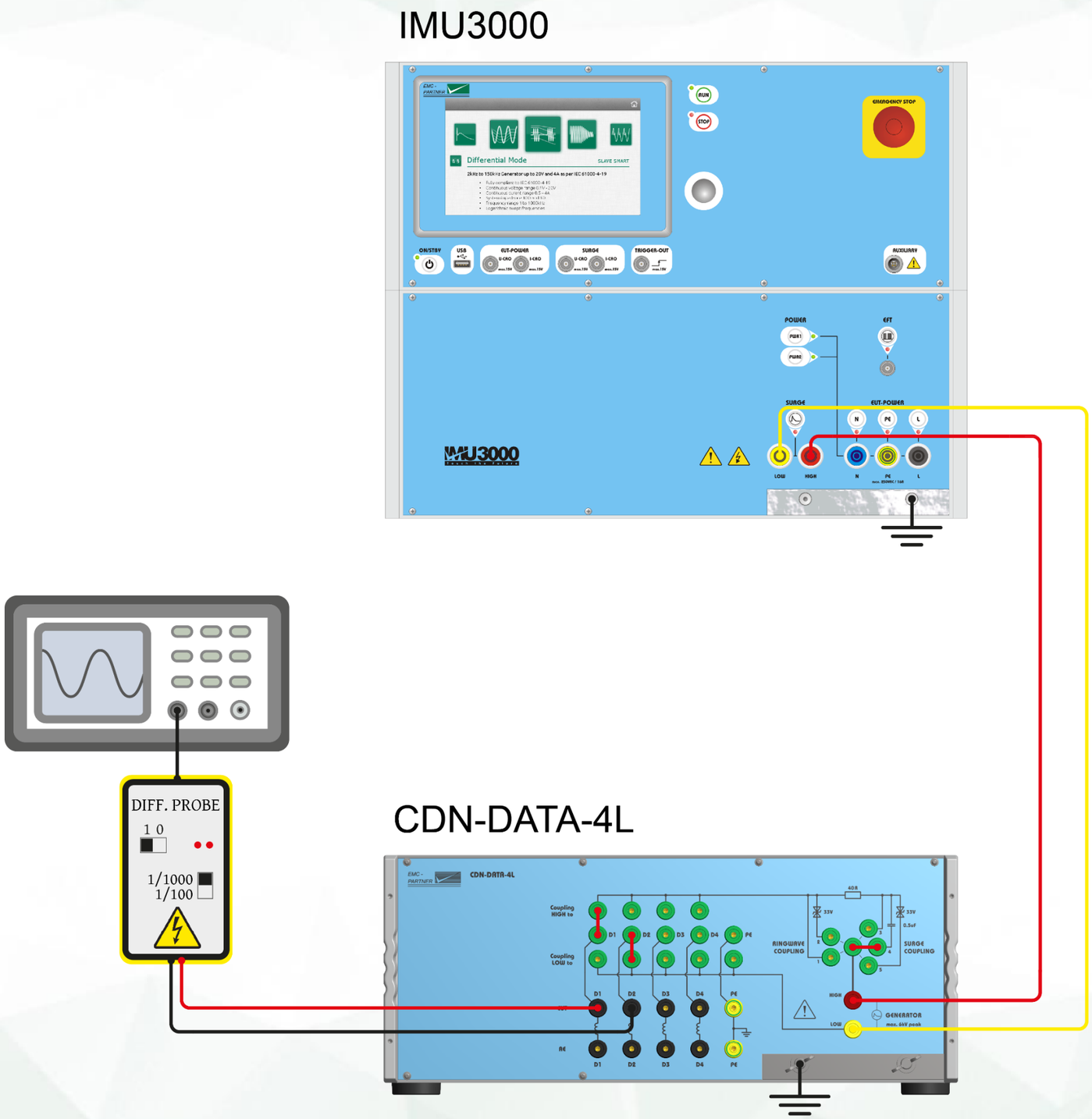

All coupling paths are calibrated successively, L-L, L-Gnd.

1.3.27. CWG: IMU3000 S/S6, CDN-DATA-4L, current calibration setup

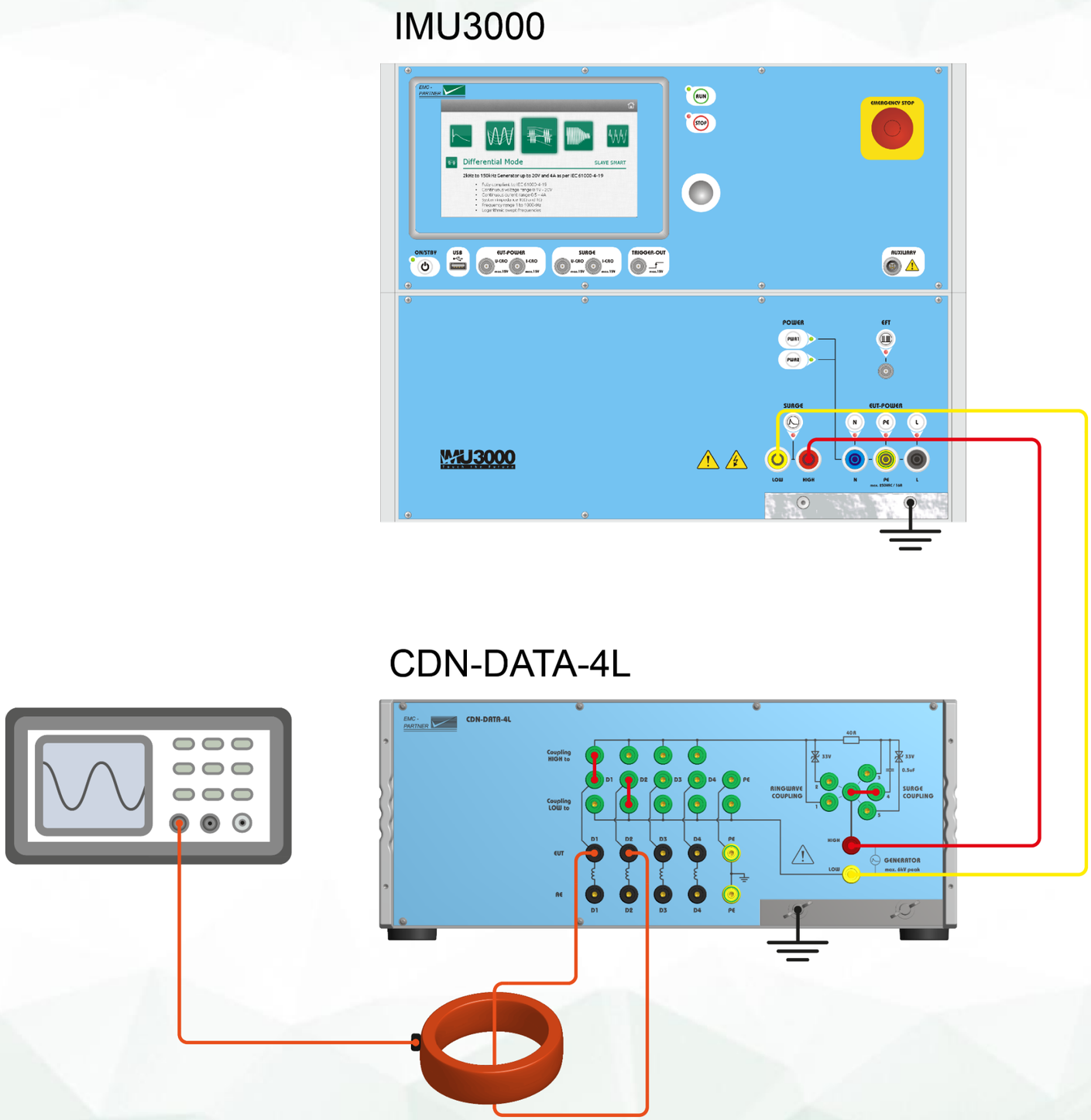

All coupling paths are calibrated successively, L-N, L-Gnd.

1.3.28. CWG: IMU3000 S/S6, CDN-DATA-4L, test setup

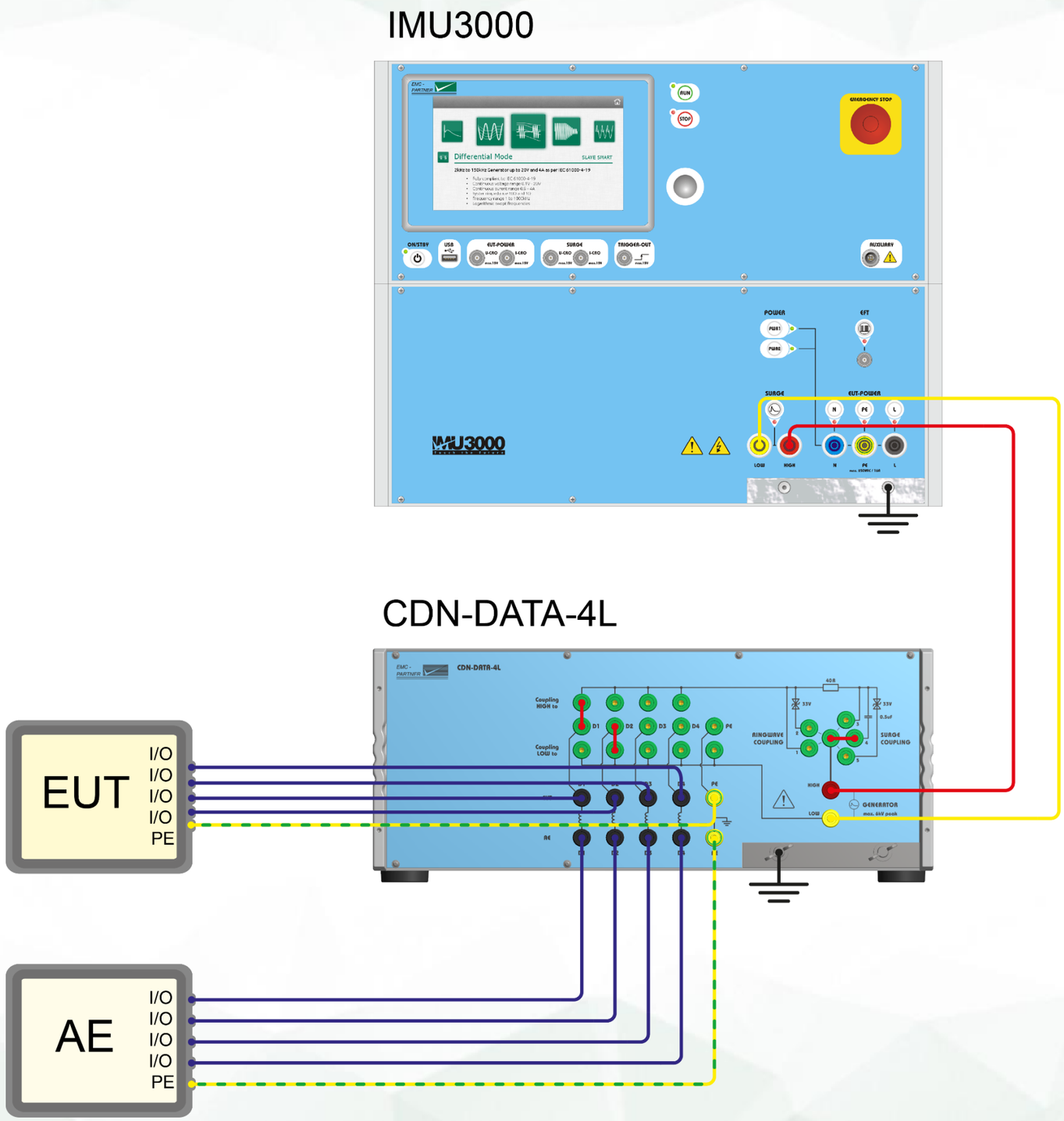

After EUT and AE connections are performed, couplings are selected successively.

1.3.29. CWG: IMU3000 S/S6, CDN-DATA-8L, voltage calibration setup

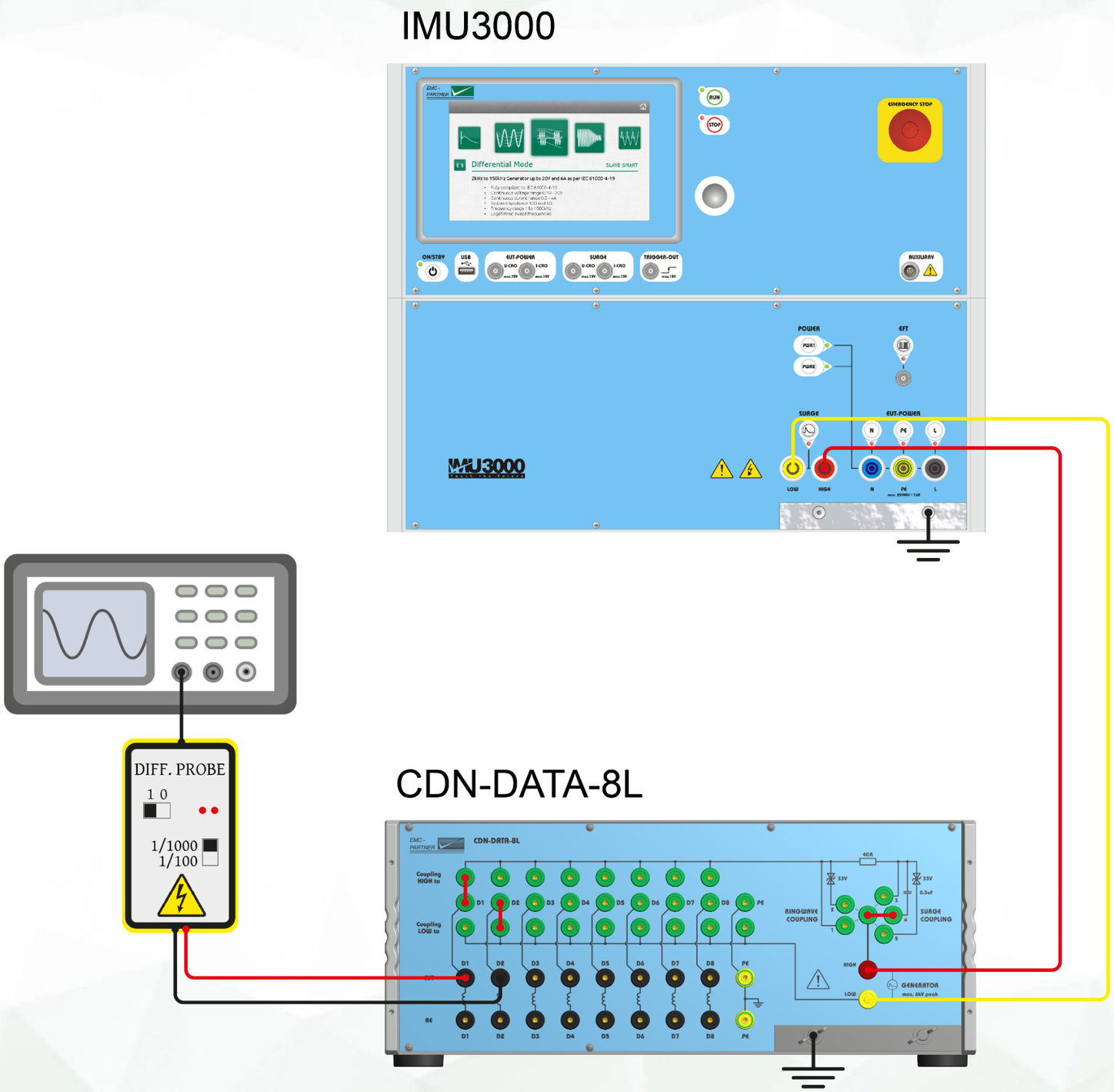

All coupling paths are calibrated successively, L-L, L-Gnd.

1.3.30. CWG: IMU3000 S/S6, CDN-DATA-8L, current calibration setup

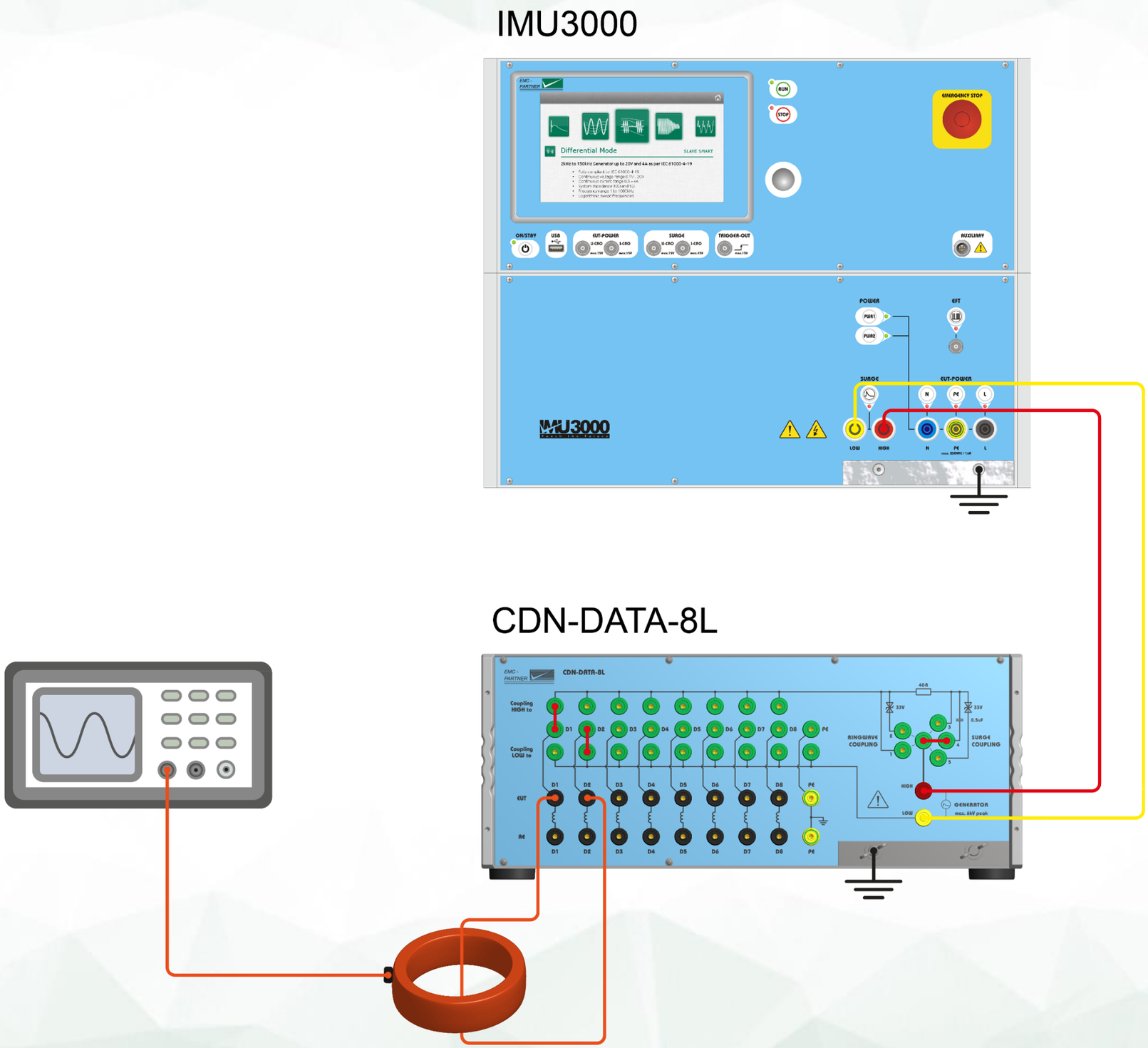

All coupling paths are calibrated successively, L-L, L-Gnd.

1.3.31. CWG: IMU3000 S/S6, CDN-DATA-8L, test setup

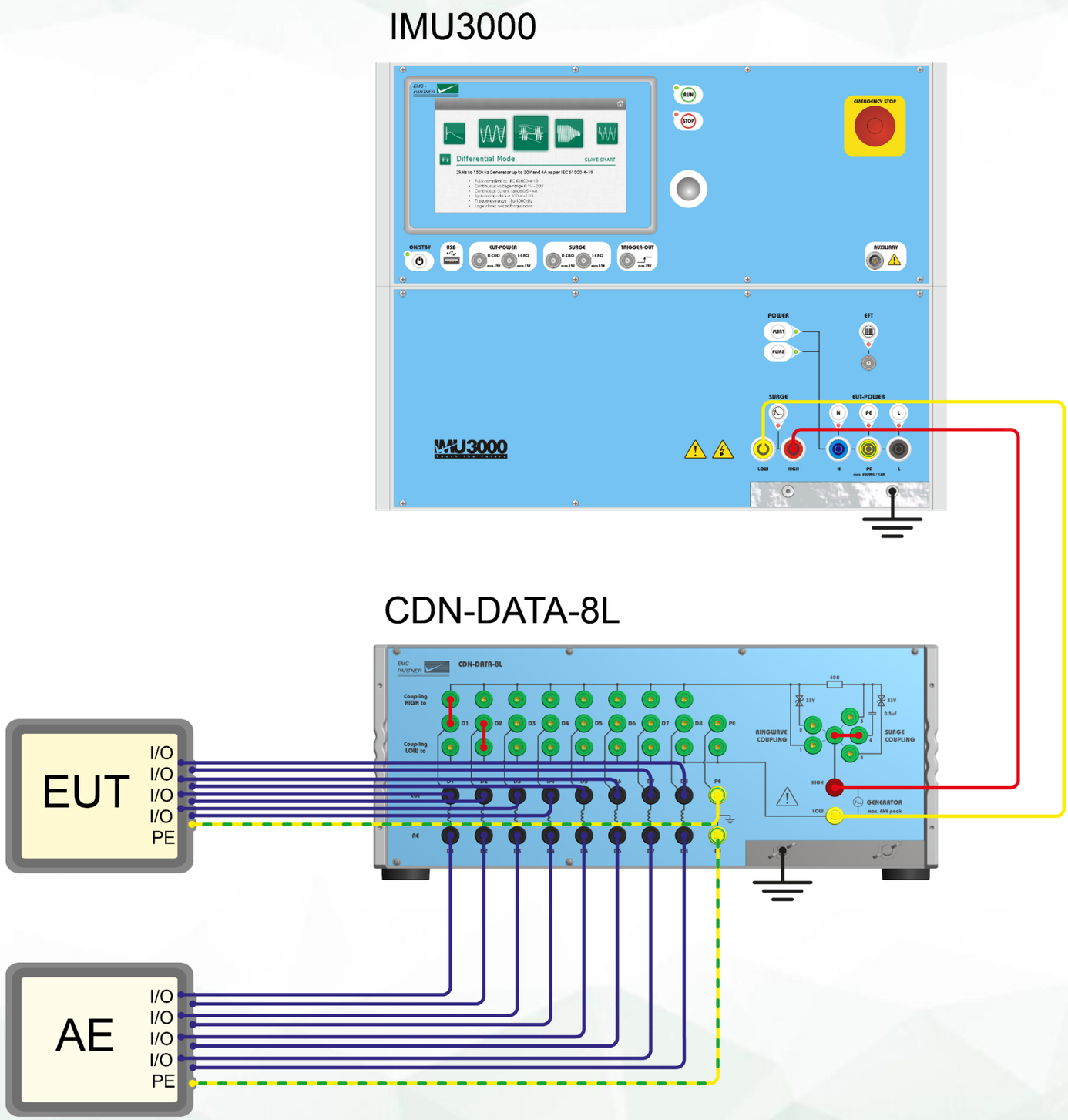

After EUT and AE connections are performed, couplings are selected successively.

1.3.32. CWG: IMU3000 S/S6, CDN-UTP ED3, voltage calibration setup for 2 unsym. lines

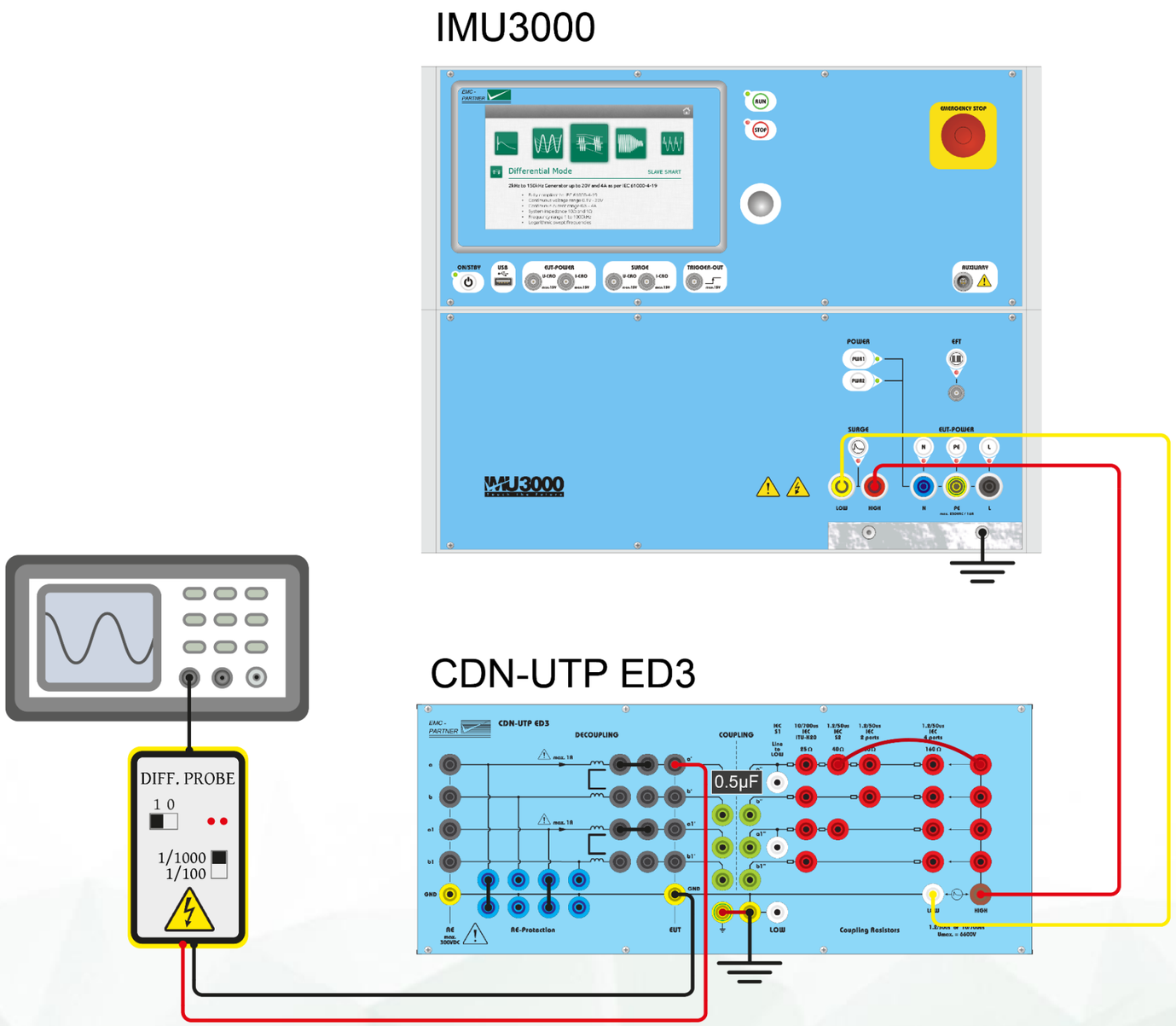

All coupling paths are calibrated successively, L1-L2, L1-Gnd, L2-Gnd.

1.3.33. CWG: IMU3000 S/S6, CDN-UTP ED3, current calibration setup for 2 unsym. lines

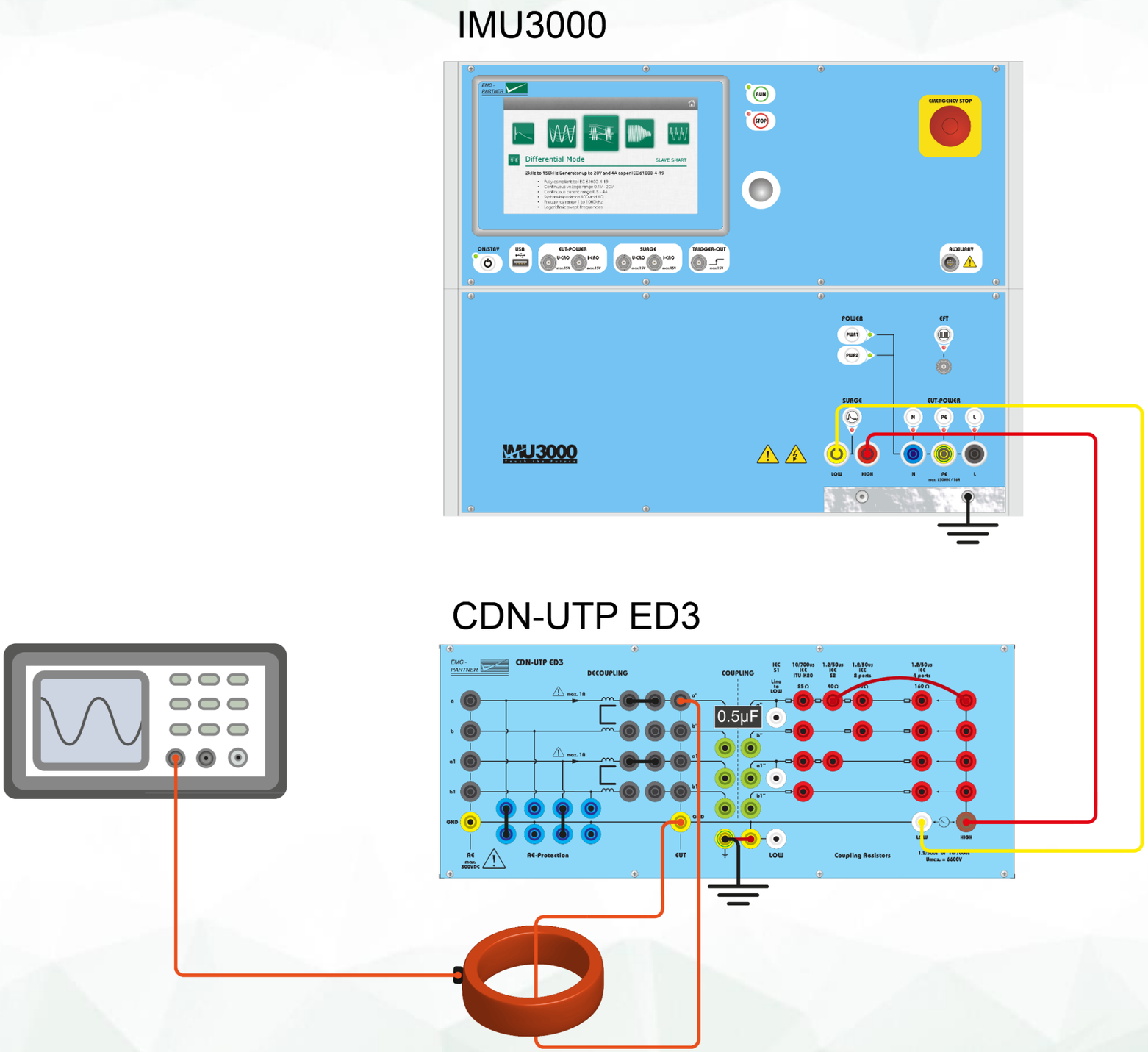

All coupling paths are calibrated successively, L1-L2, L1-Gnd, L2-Gnd.

1.3.34. CWG: IMU3000 S/S6, CDN-UTP ED3, test setup for 2 unsym. lines

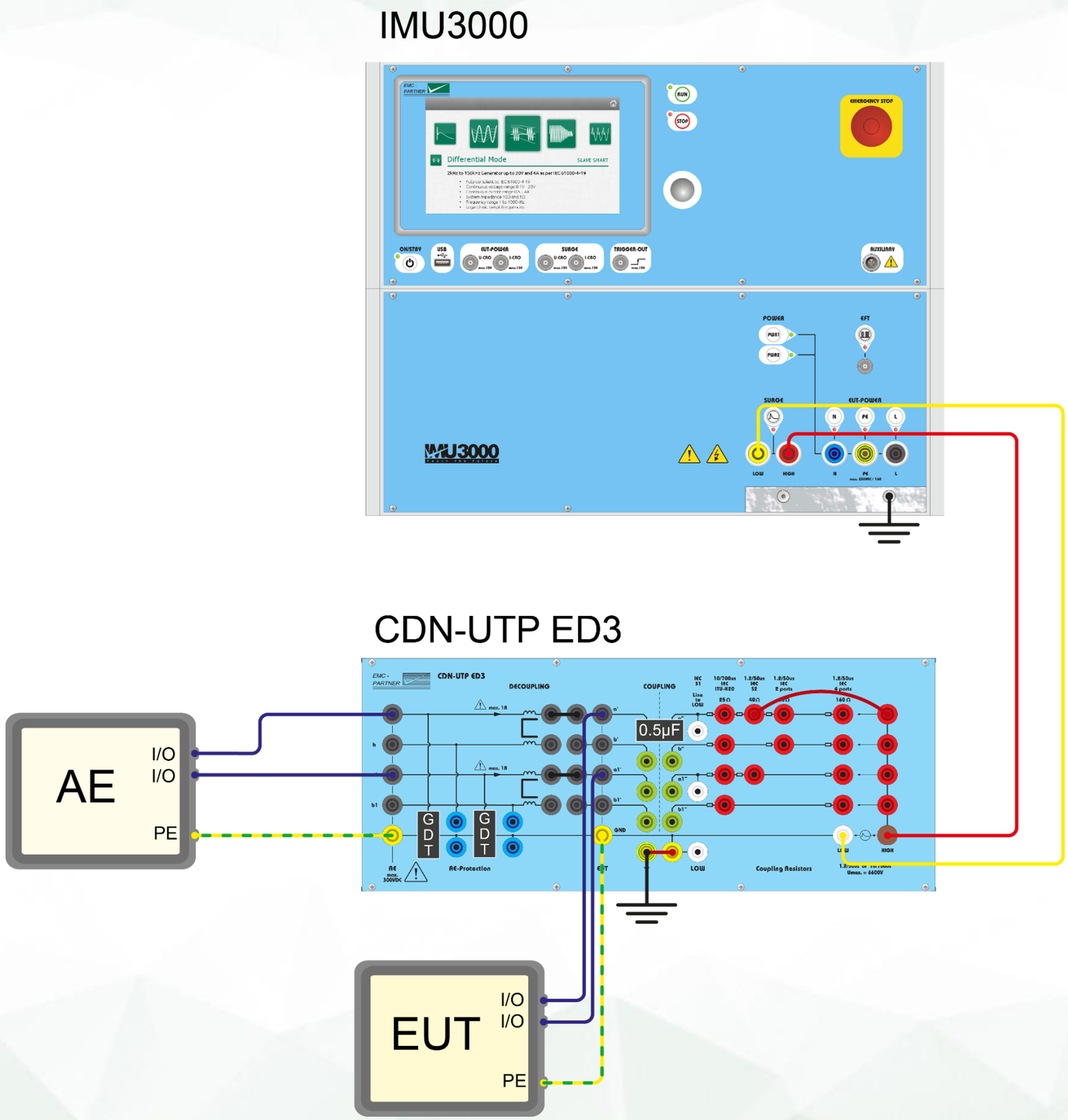

This CDN can be used also for testing up to 4 sym. lines. Maximum test level is 6 kV.

1.3.35. CWG: IMU3000 S/S6, CDN-UTP ED3, voltage calibration setup for 4 sym. lines (2 sym. lines also possible)

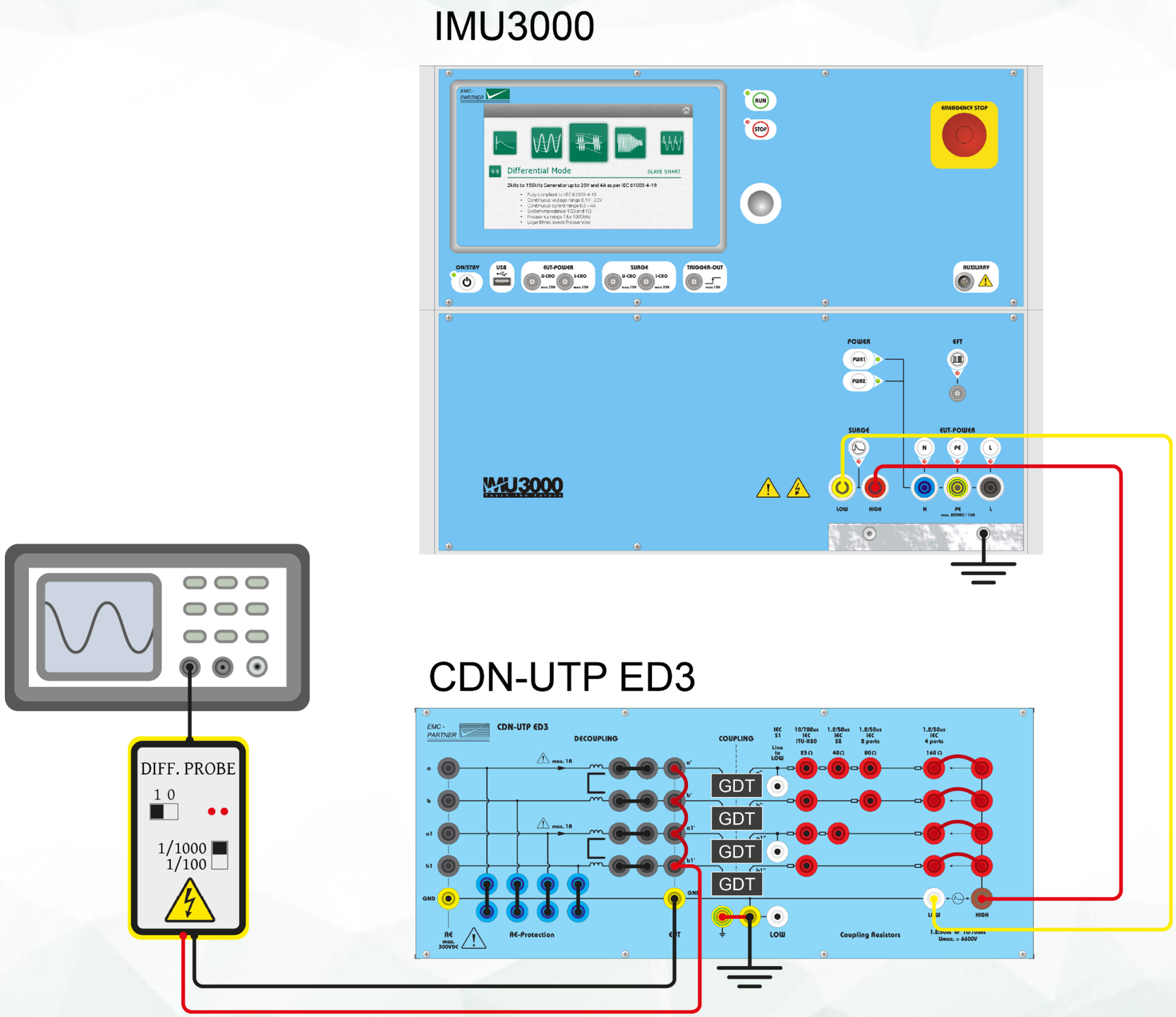

For 4 lines, coupling is performed with 4 x 160 Ω and 4 x GDT.

1.3.36. CWG: IMU3000 S/S6, CDN-UTP ED3, current calibration setup for 4 sym. lines (2 sym. lines also possible)

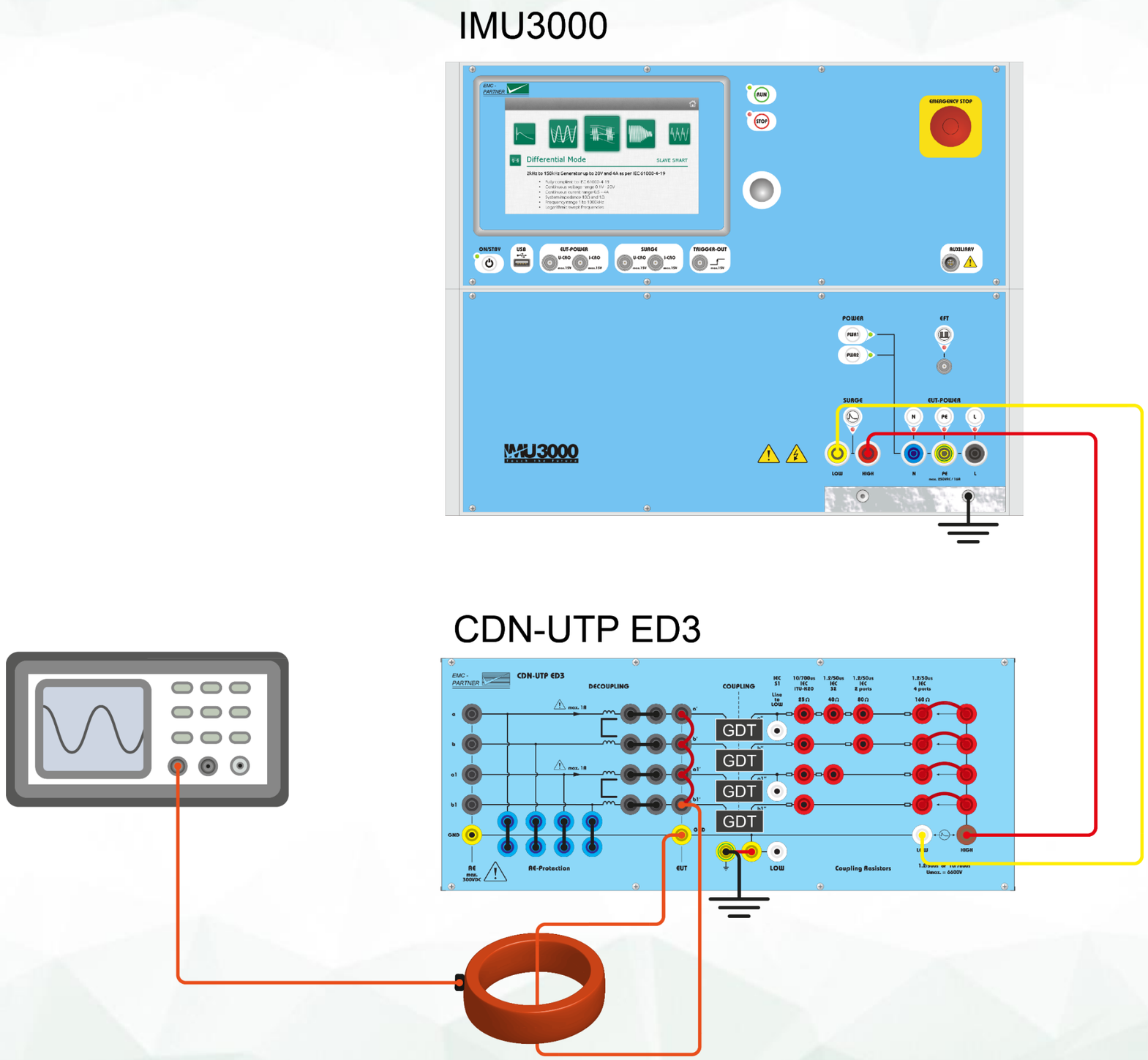

AE side is connected to ground during calibration.

1.3.37. CWG: IMU3000 S/S6, CDN-UTP ED3, test setup for 4 sym. lines (2 sym. lines also possible)

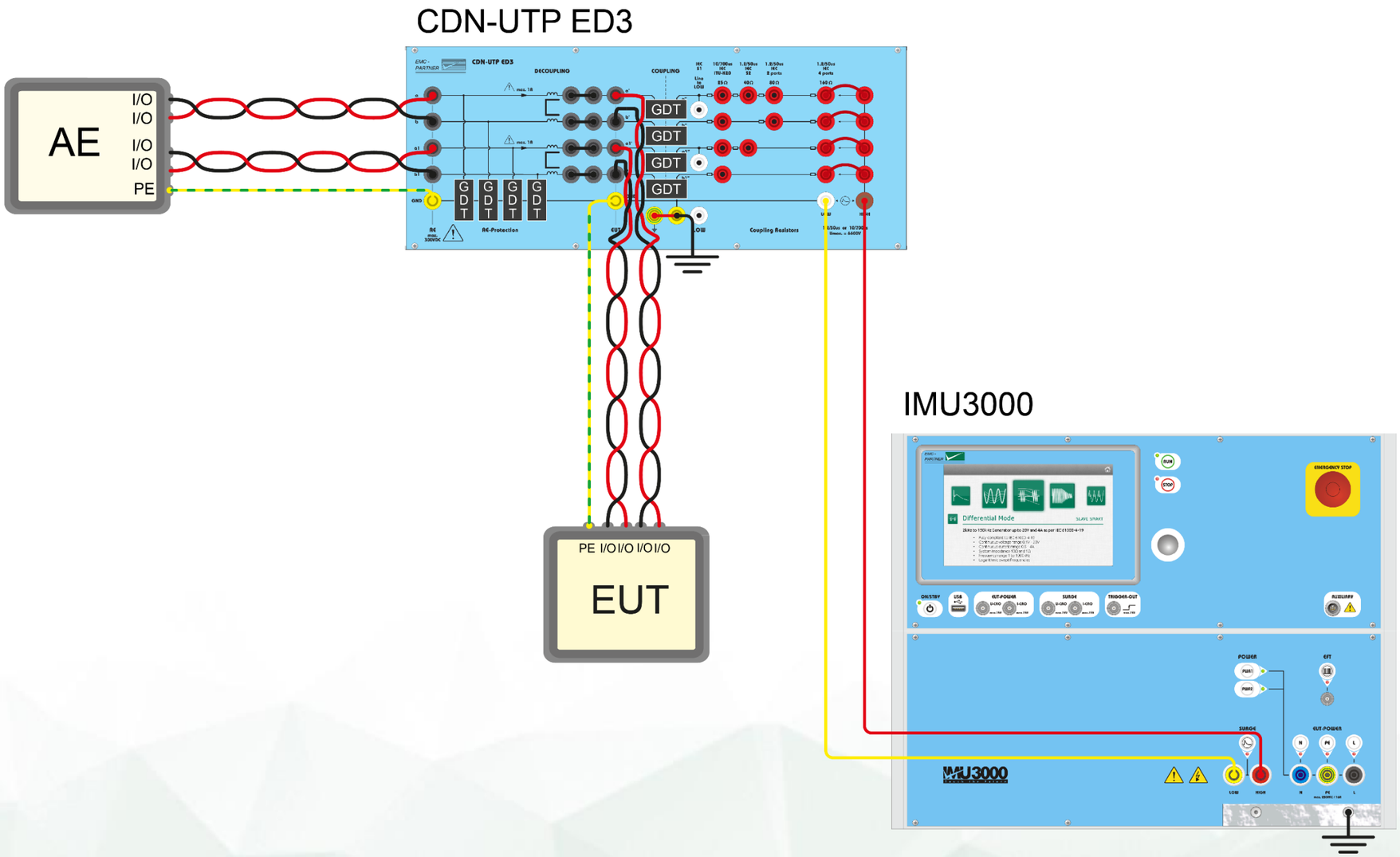

Coupling: all lines against Gnd.

1.3.38. CWG: IMU3000 S/S6, CDN-UTP8 ED3, voltage calibration setup for 2 unsym. lines (4 unsym. lines also possible)

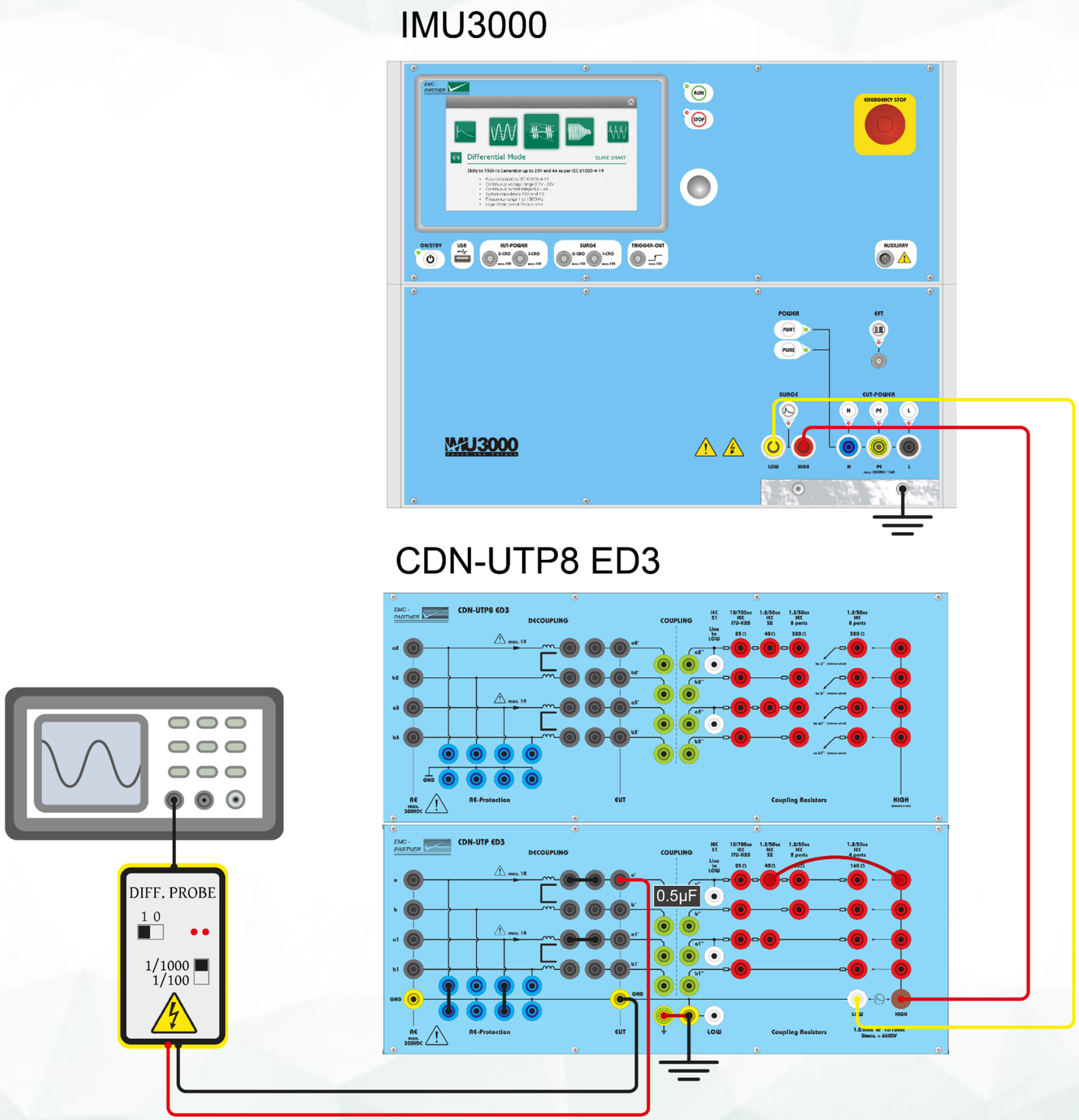

All coupling paths are calibrated successively, L-L, L-Gnd.

1.3.39. CWG: IMU3000 S/S6, CDN-UTP8 ED3, current calibration setup for 2 unsym. lines (4 unsym. lines also possible)

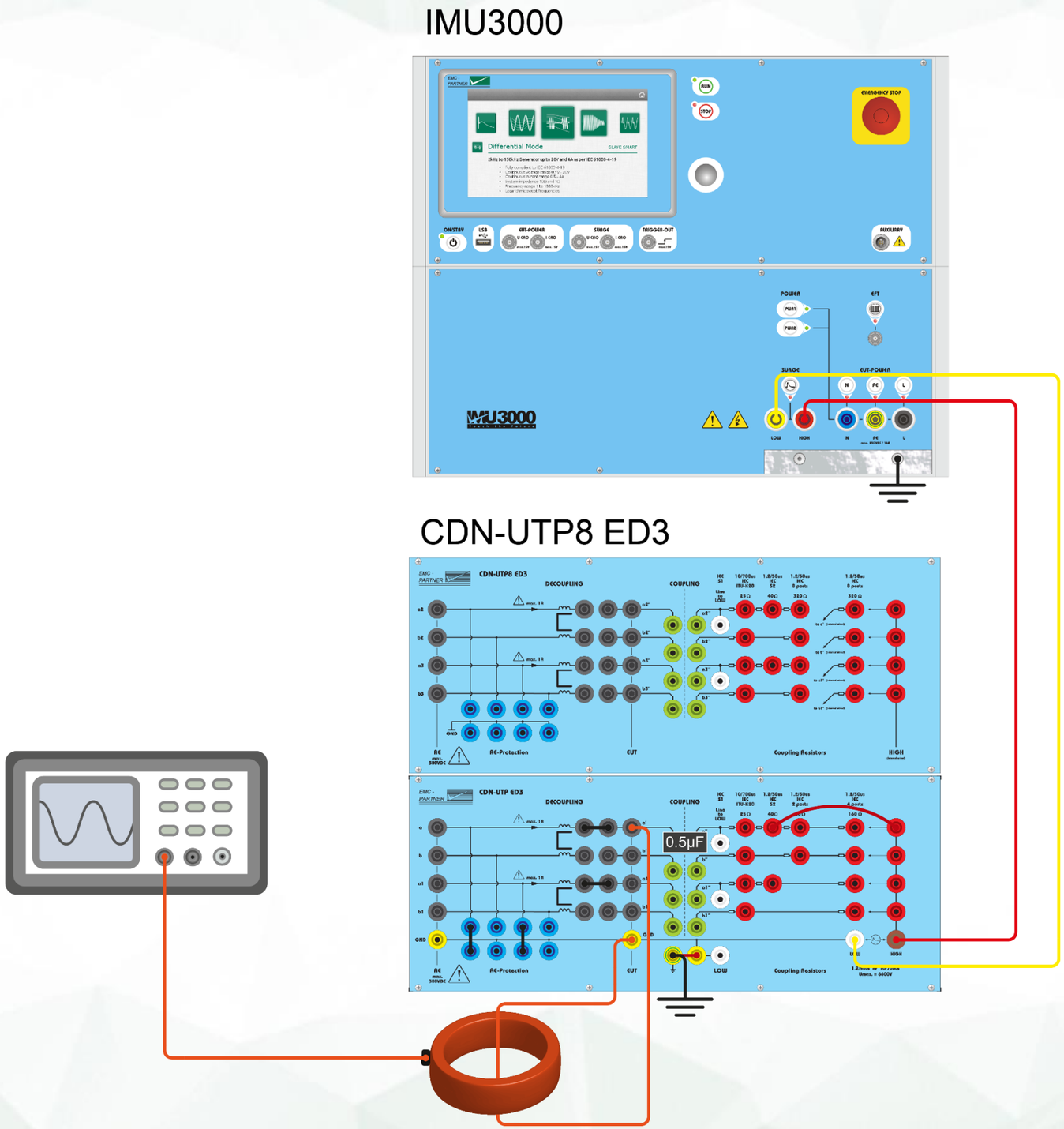

All coupling paths are calibrated successively, L-L, L-Gnd.

1.3.40. CWG: IMU3000 S/S6, CDN-UTP8 ED3, test setup for 2 unsym. lines (4 unsym. lines also possible)

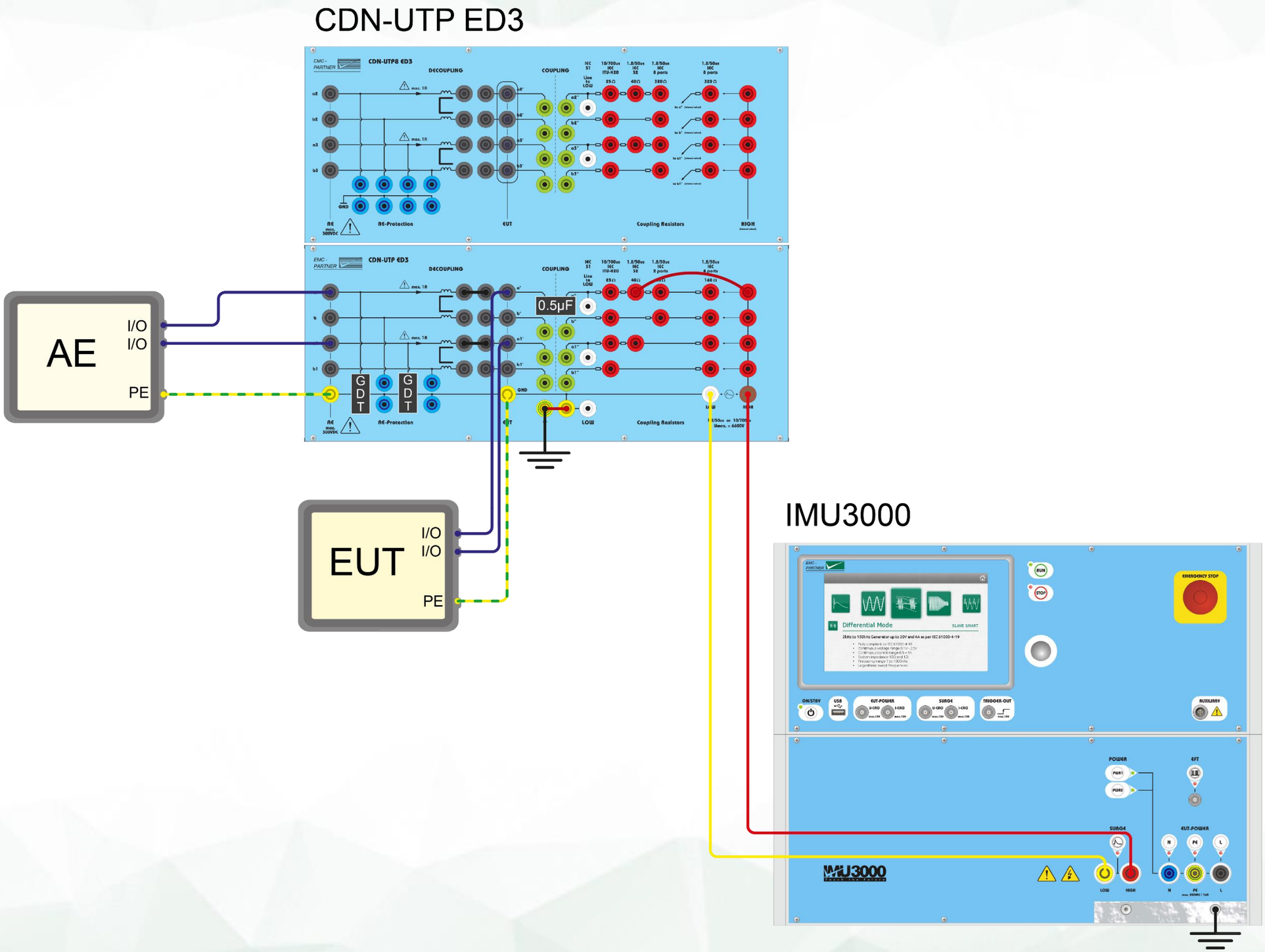

This CDN can be used also for testing up to 8 high speed sym. lines. Maximum test level is 6 kV.

1.3.41. CWG: IMU3000 S/S6, CDN-UTP8 ED3, voltage calibration setup for 8 sym. lines (2, 4 sym. lines also possible)

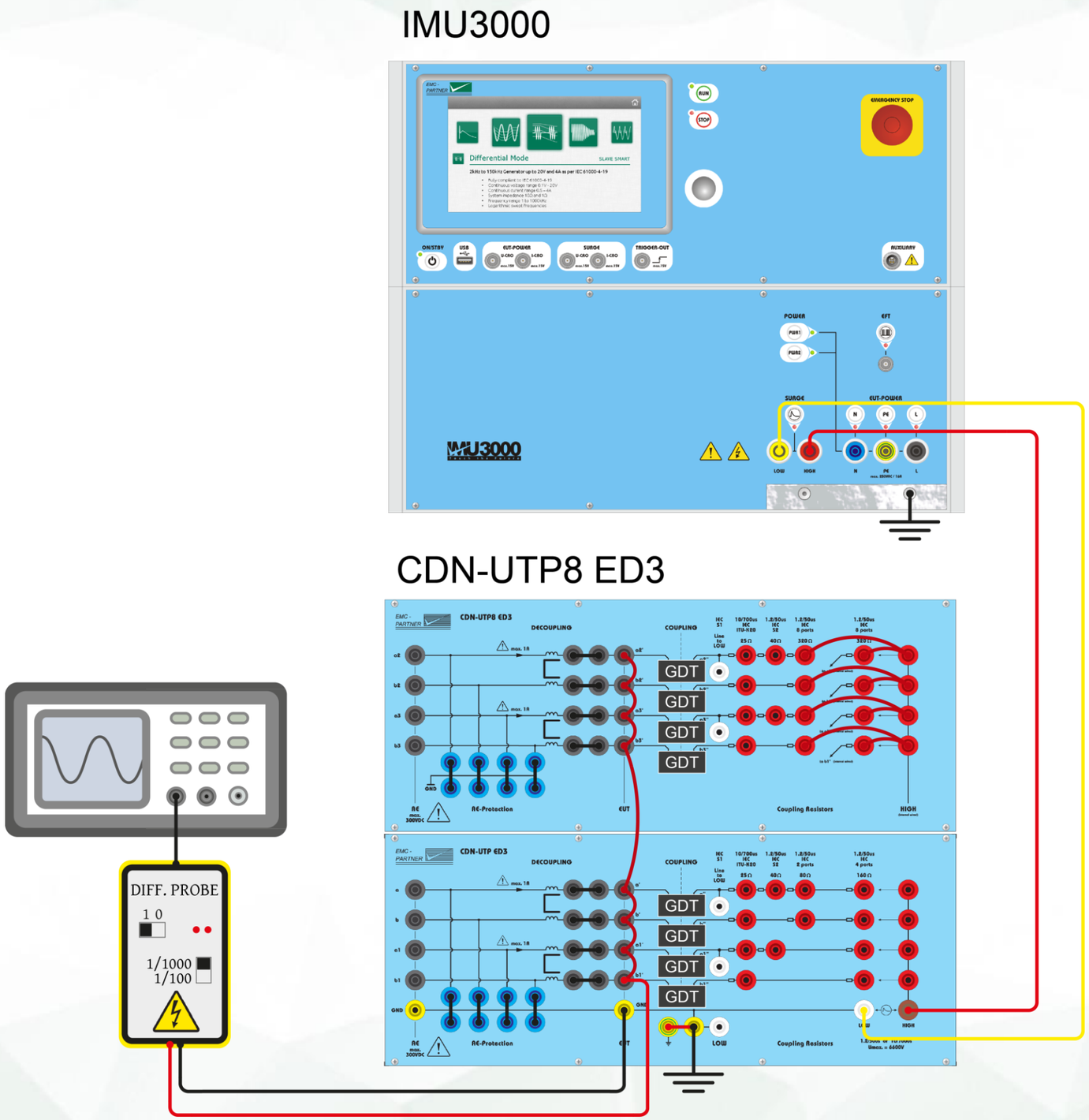

For 4 lines, coupling is performed with 8 x 320 Ω and 8 x GDT.

1.3.42. CWG: IMU3000 S/S6, CDN-UTP8 ED3, current calibration setup for 8 sym. lines (2, 4 sym. lines also possible)

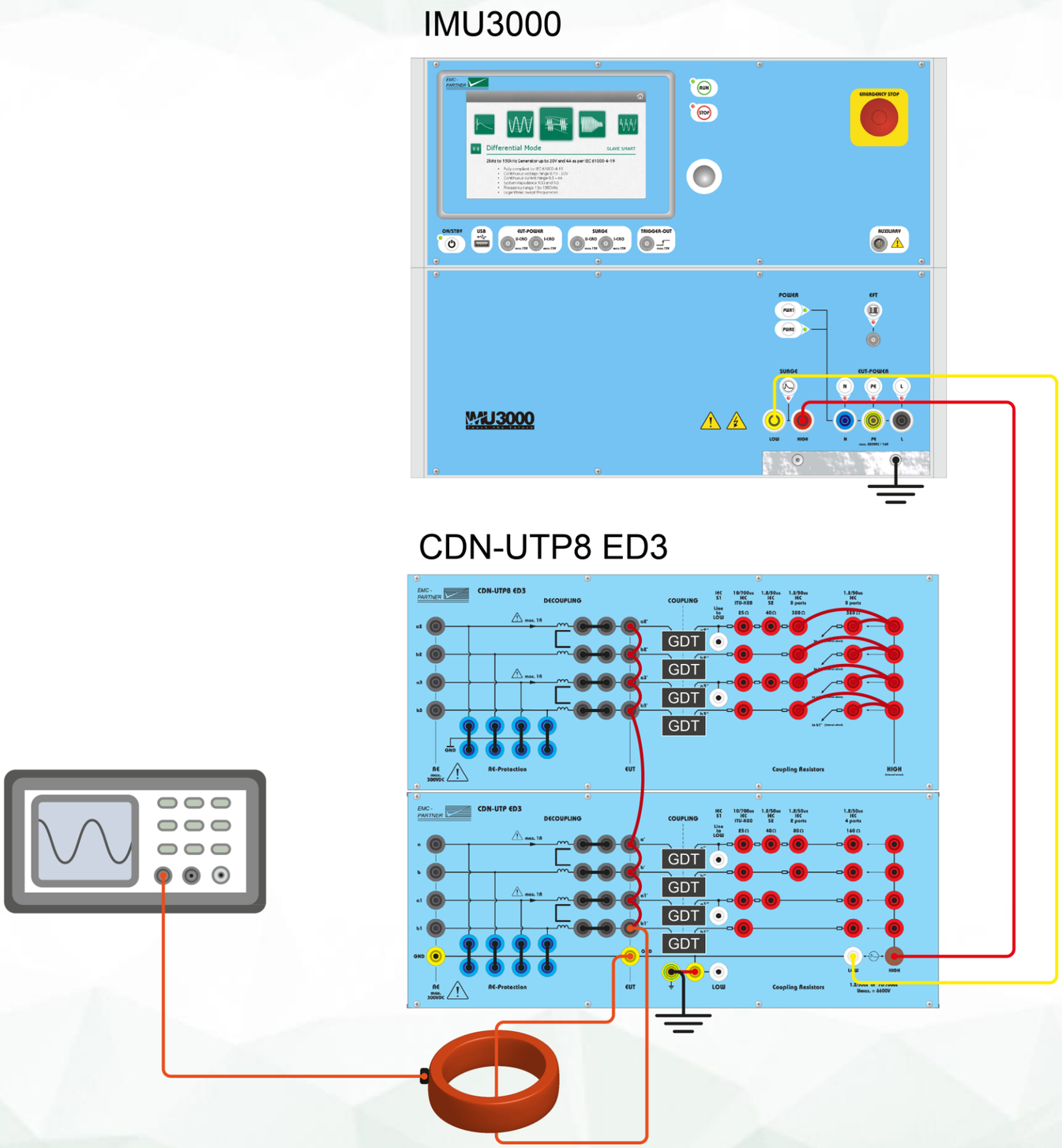

AE side is connected to ground during calibration.

1.3.43. CWG: IMU3000 S/S6, CDN-UTP8 ED3, test setup for 8 sym. lines without Ethernet adapters (2, 4 sym. lines also possible)

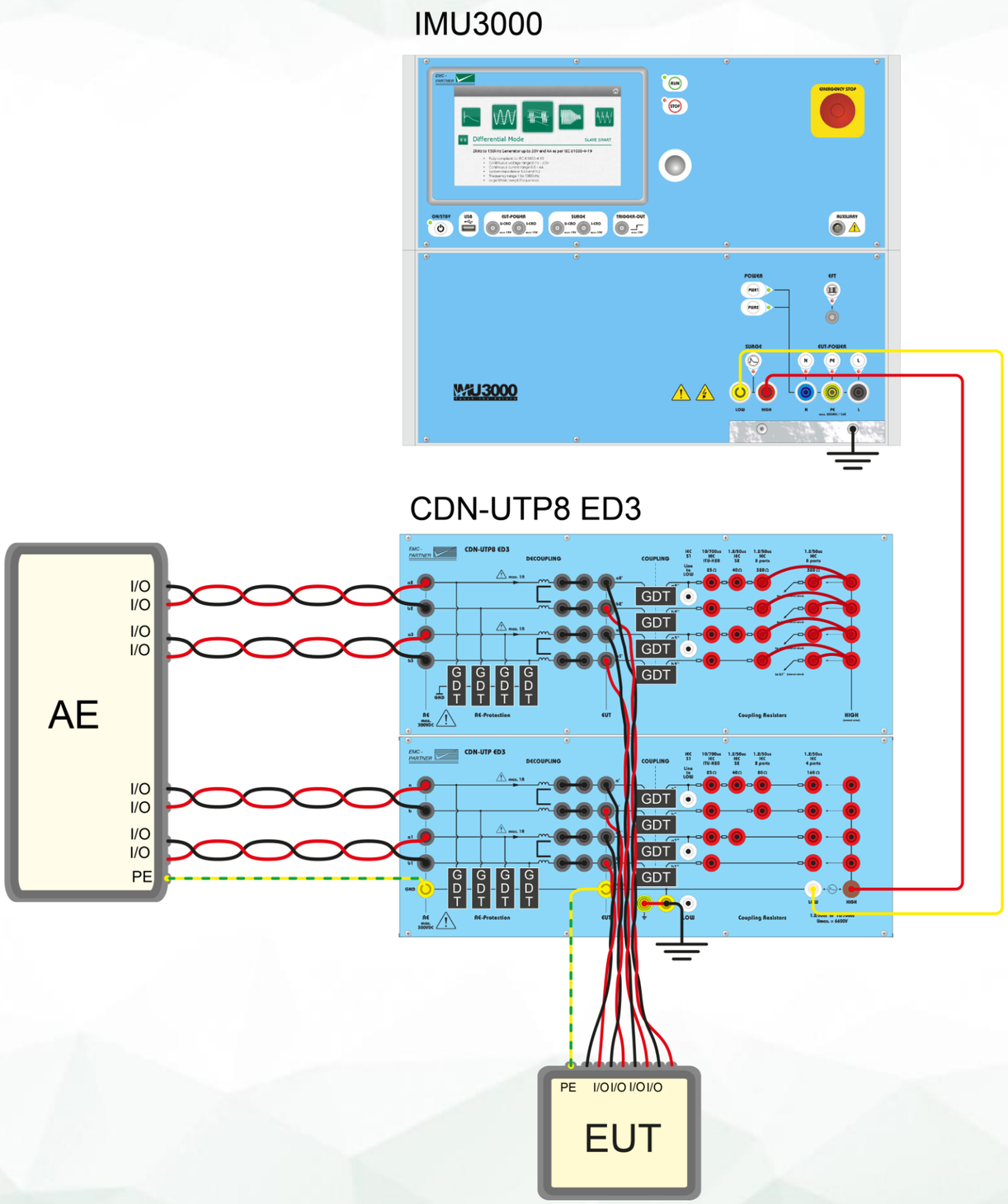

Coupling: all lines against Gnd.

1.3.44. CWG: IMU3000 S/S6, CDN-UTP8 ED3, test setup for 8 sym. lines with Ethernet adapters, step one: connections and bridges on the front panel

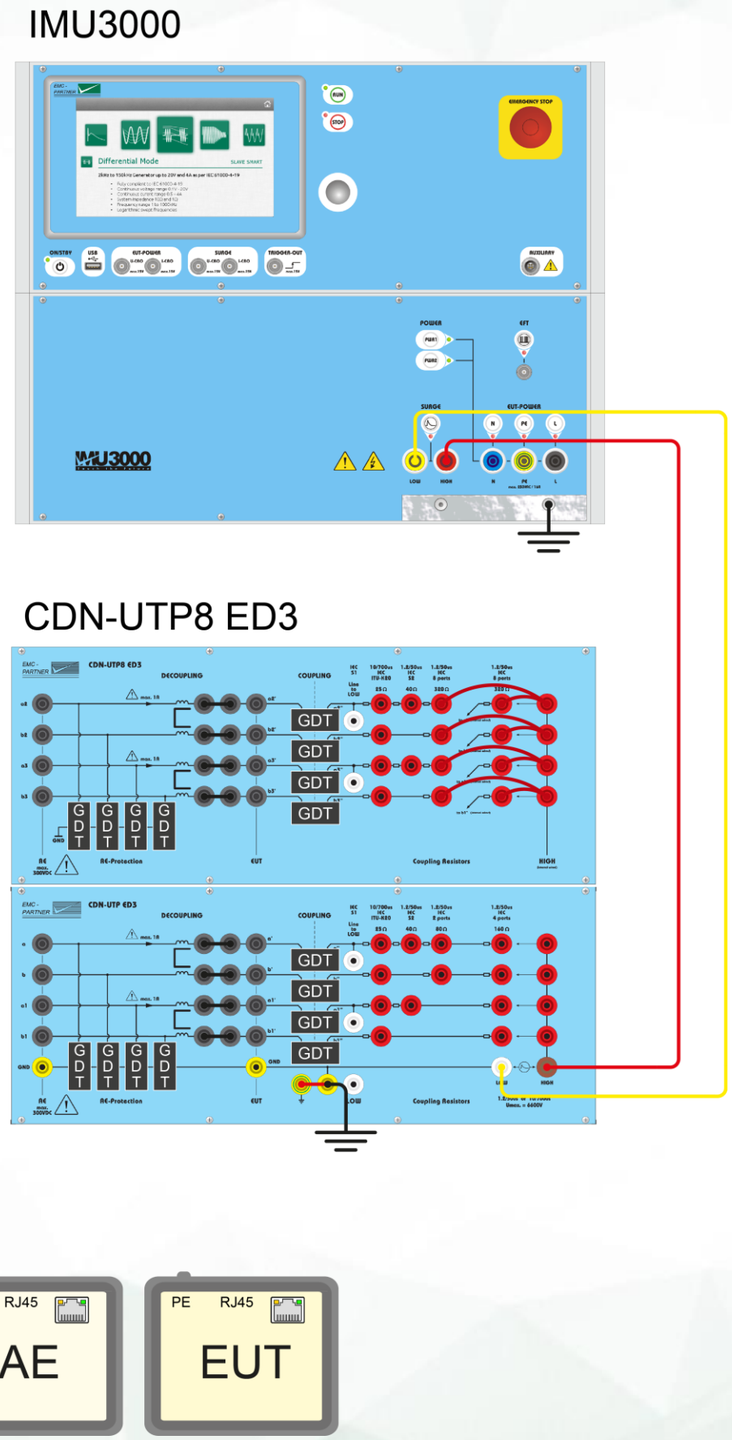

Coupling resistors, elements have to be connected, protection elements on AE side have to be connected.

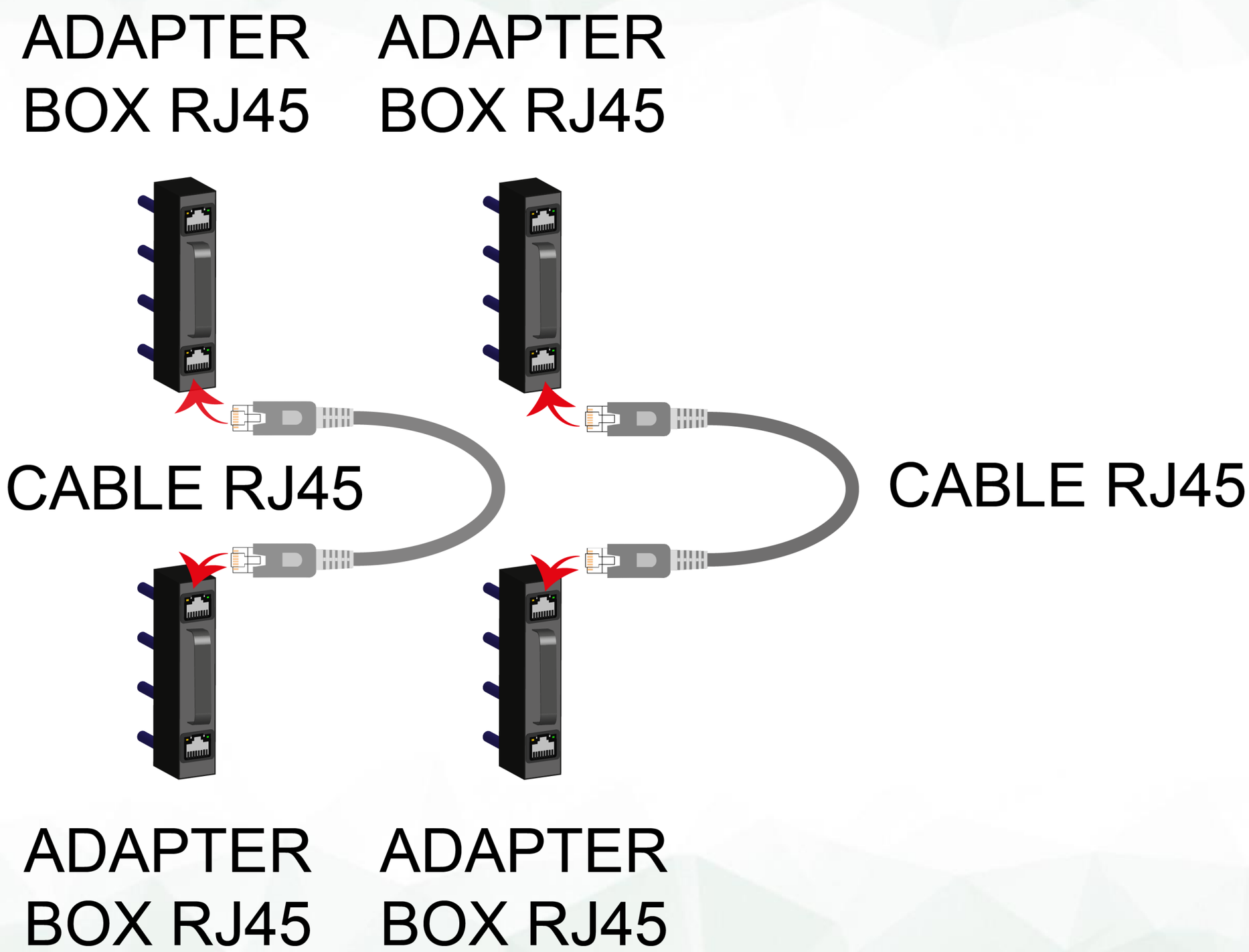

In order to maintain a high speed communication, special adapters are utilized.

1.3.46. CWG: IMU3000 S/S6, CDN-UTP8 ED3, test setup for 8 sym. lines with Ethernet adapters, step three: connect adapters, cables, EUT and AE

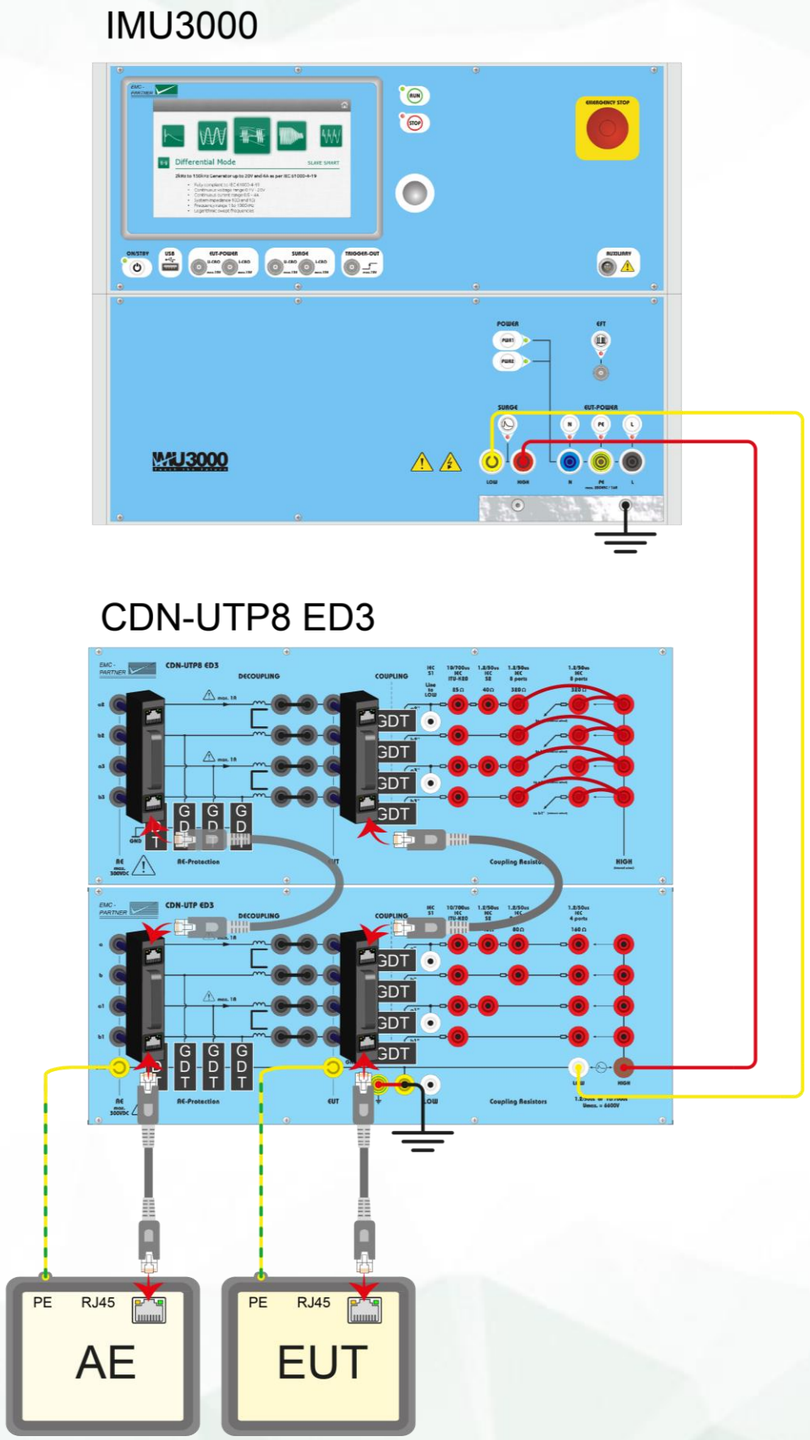

Coupling: all lines against Gnd.

IEC 61000-4-5
Edition 3.0 / 2014

CDN UTP ED3 and CDN UTP8 ED3
are the perfect solutions for applying 10/700 µs
telecom surge pulses

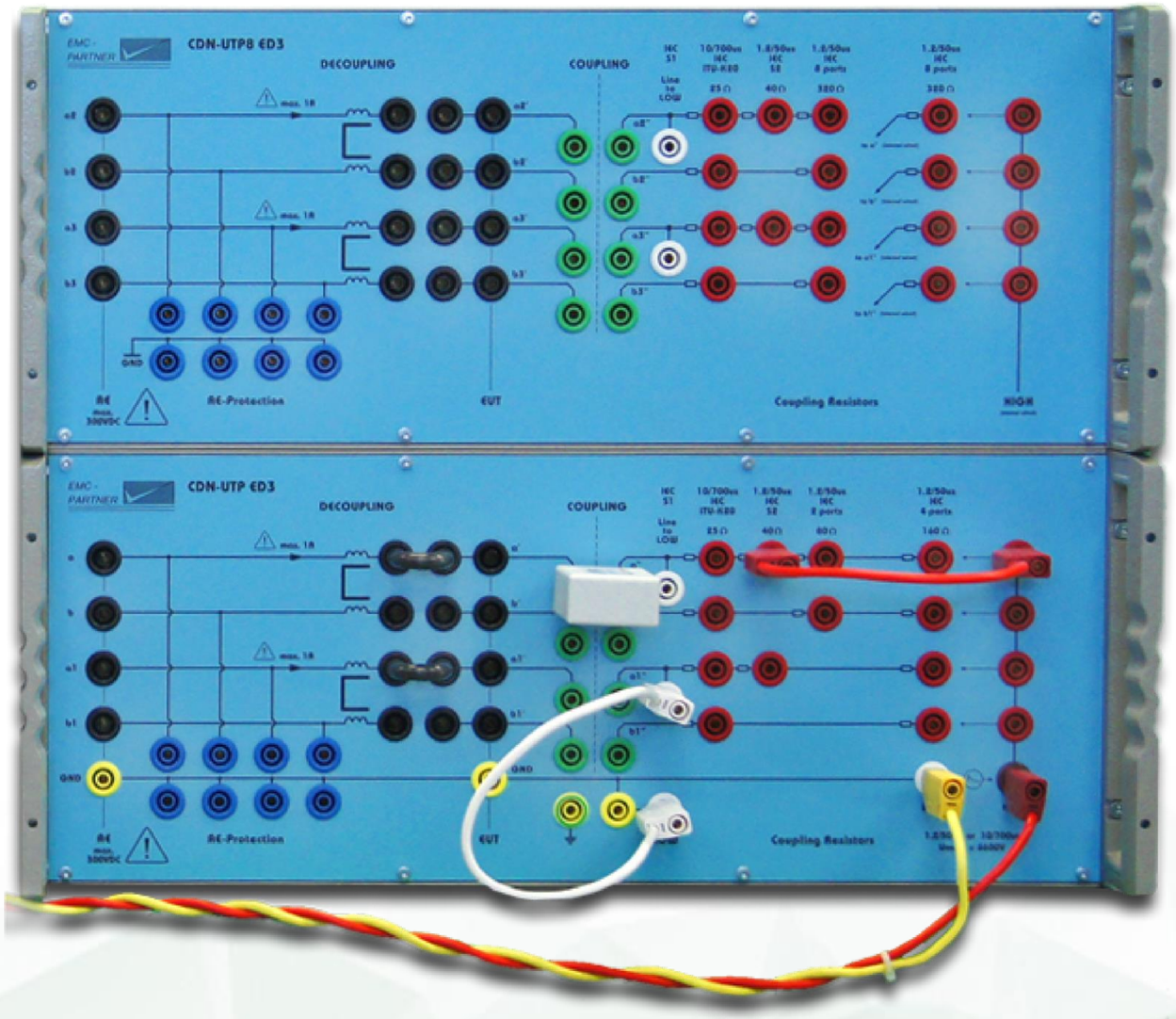

1.4.1. Tel. surge: IMU3000 T/T6, CDN-UTP ED3, voltage calibration setup for 2 sym. lines (4 sym. lines also possible)

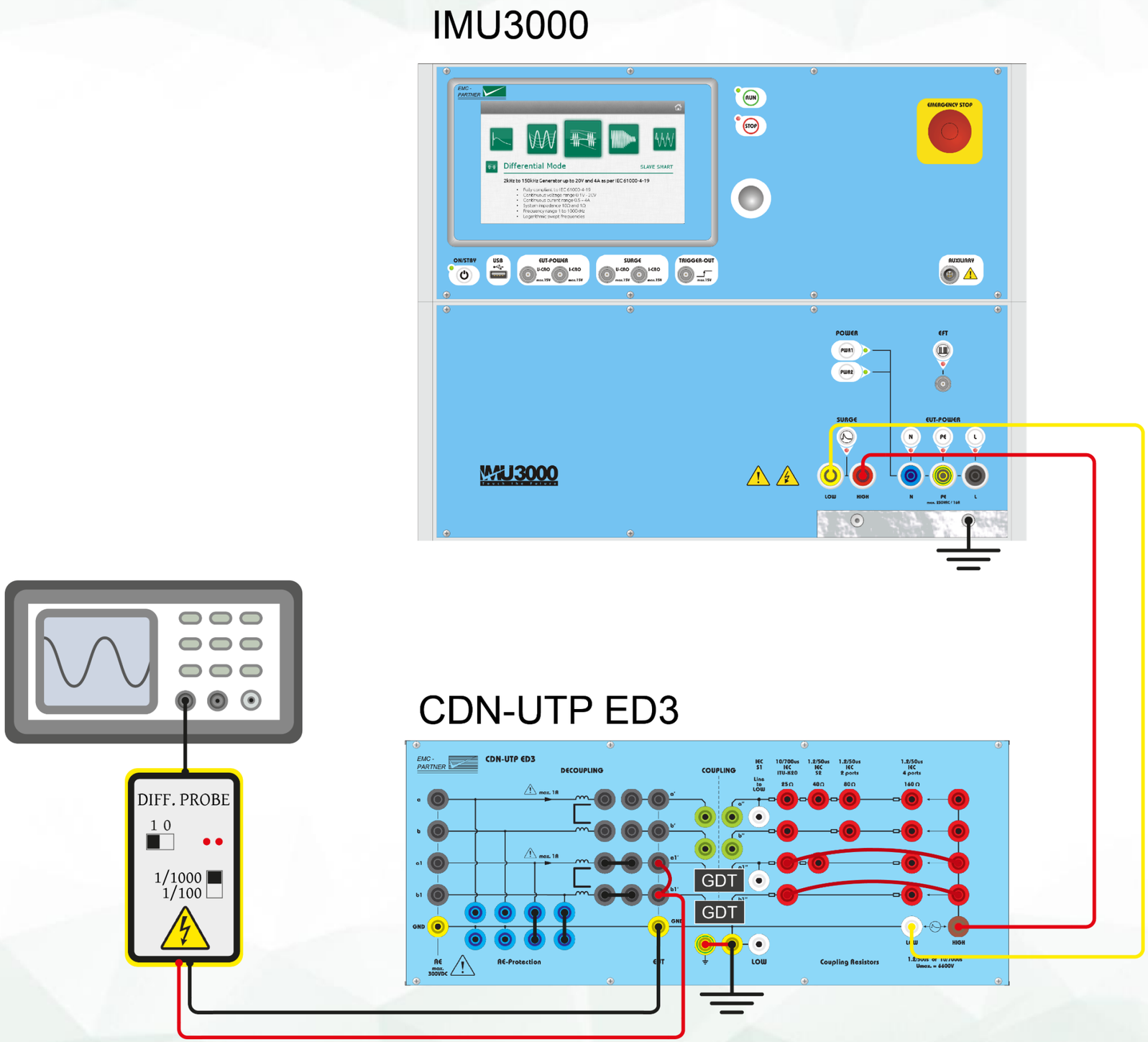

For 2 lines, coupling is performed with 2 x 25 Ω and 2 x GDT.

1.4.2. Tel. surge: IMU3000 T/T6, CDN-UTP ED3, current calibration setup for 2 sym. lines (4 sym. lines also possible)

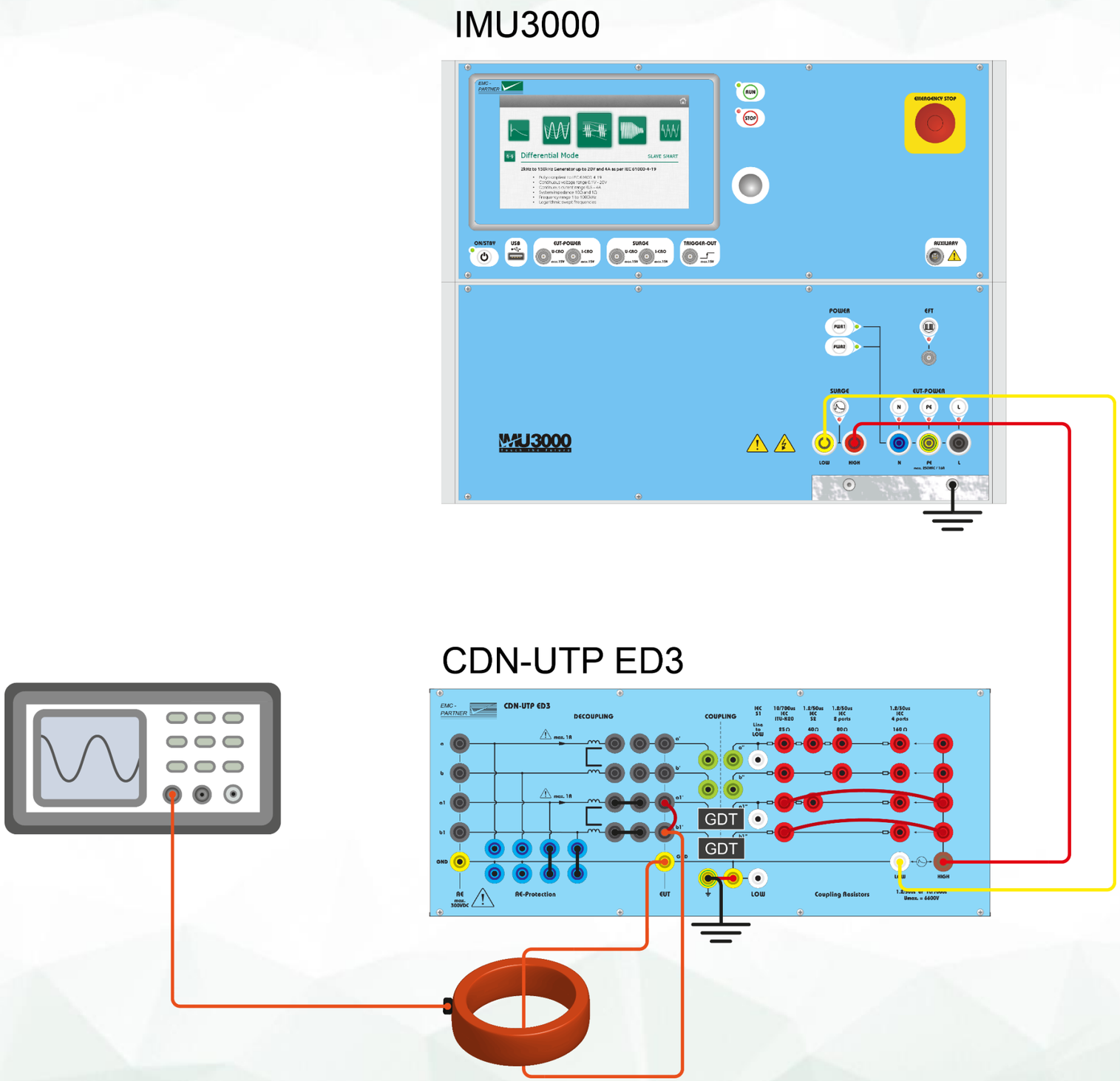

AE side is connected to ground during calibration.

1.4.3. Tel. surge: IMU3000 T/T6, CDN-UTP ED3, test setup for 2 sym. lines (2 sym. lines also possible)

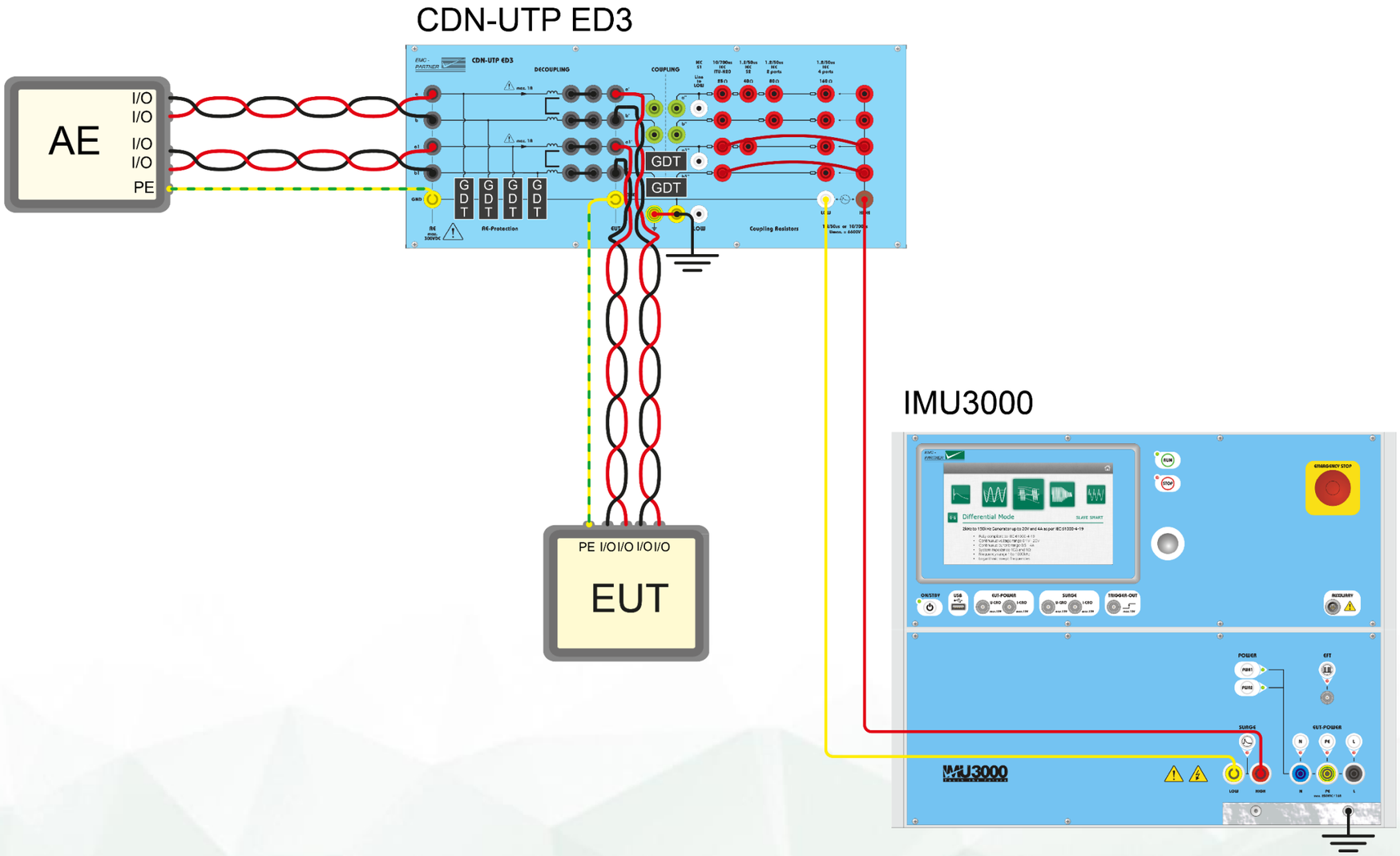

IEC 61000-4-5 Ed. 3 describes testing only 2 lines at a time. 2 lines can be decoupled (standard) or 4 as shown above.

1.4.4. Tel. surge: IMU3000 T/T6, CDN-UTP8 ED3, voltage calibration setup for 2 sym. lines (4, 8 sym. lines also possible)

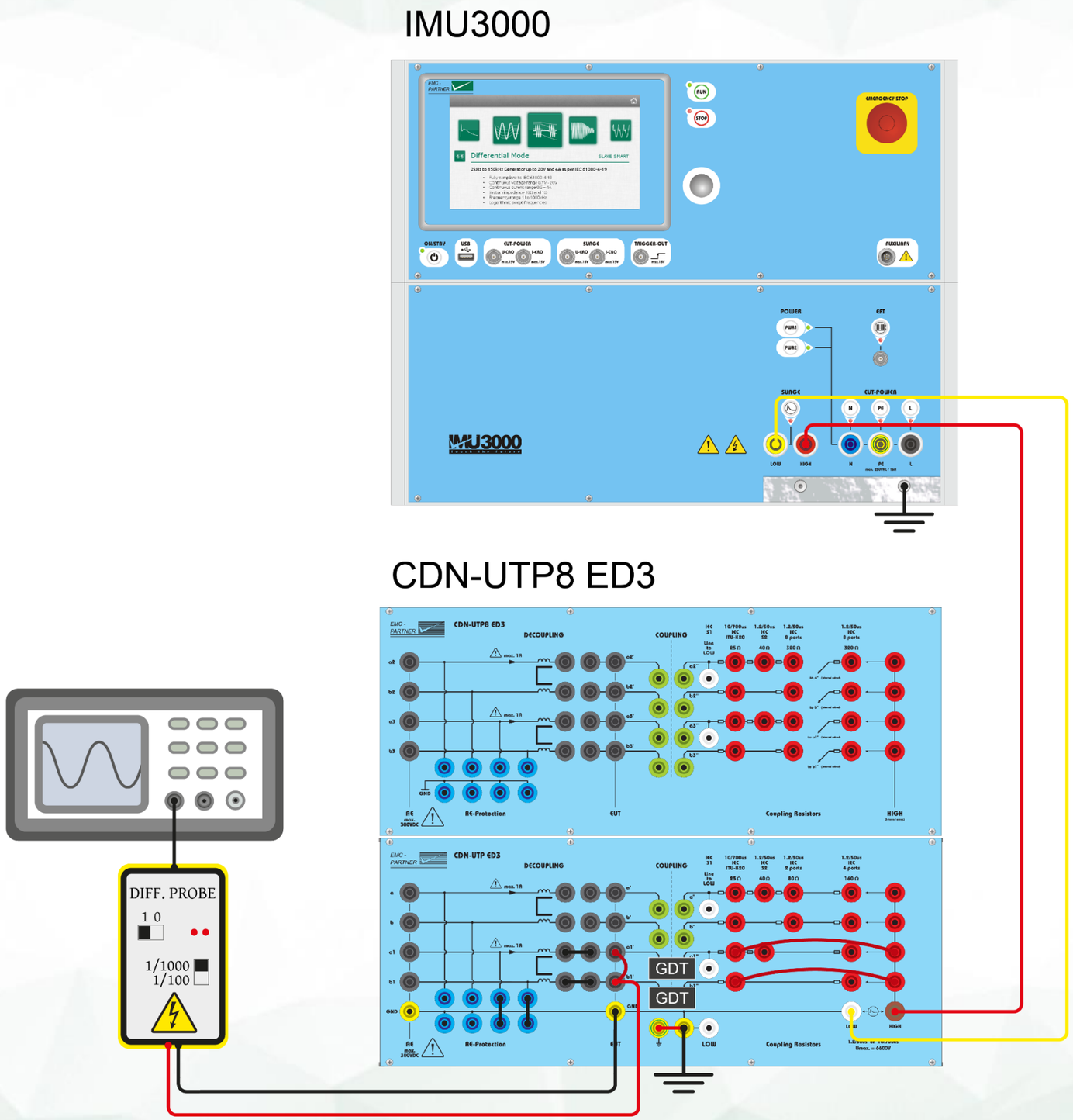

For 2 lines, coupling is performed with 2 x 25 Ω and 2 x GDT.

1.4.5. Tel. surge: IMU3000 T/T6, CDN-UTP8 ED3, current calibration setup for 2 sym. lines (4, 8 sym. lines also possible)

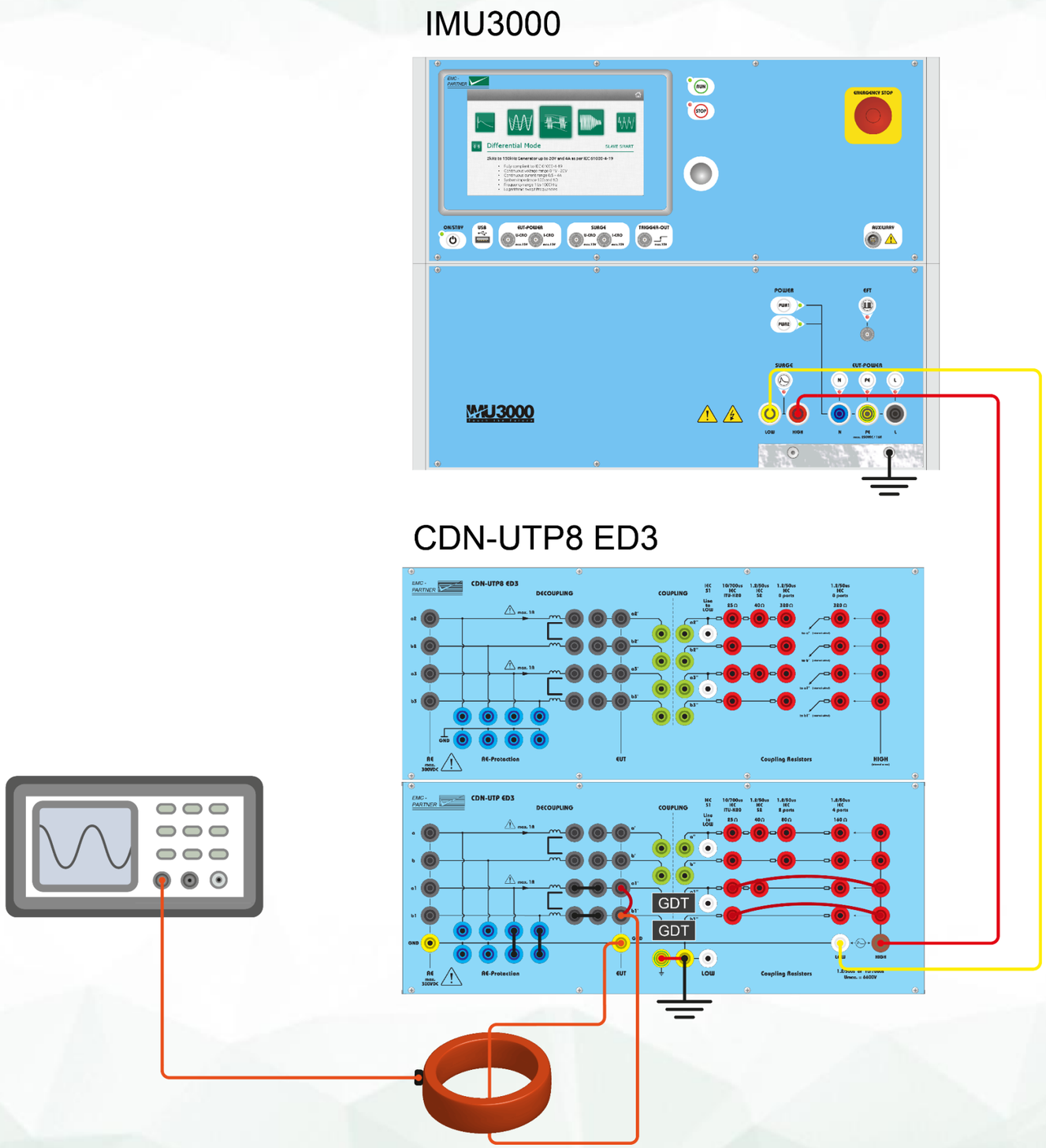

AE side is connected to ground during calibration.

1.4.6. Tel. surge: IMU3000 T/T6, CDN-UTP8 ED3, test setup for 2 sym. lines without Ethernet adapters (4, 8 sym. lines also possible)

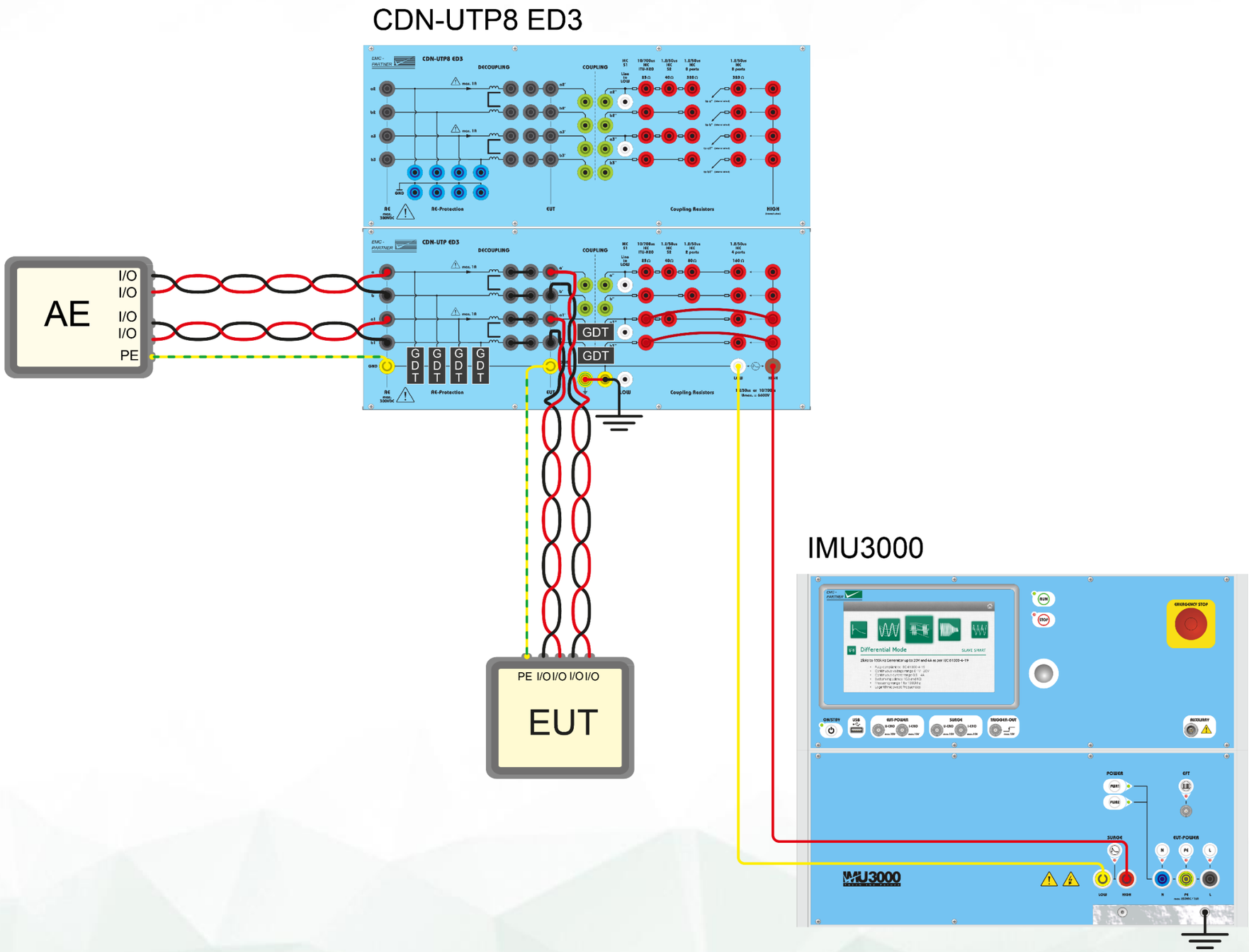

IEC 61000-4-5 Ed. 3 describes testing only 2 lines at a time. 2 lines can be decoupled (standard), 4 as shown above, or 8 also.

1.4.7. Tel. surge: IMU3000 T/T6, CDN-UTP8 ED3, test setup for 2 sym. lines with Ethernet adapters, step one: connections and bridges on the from panel

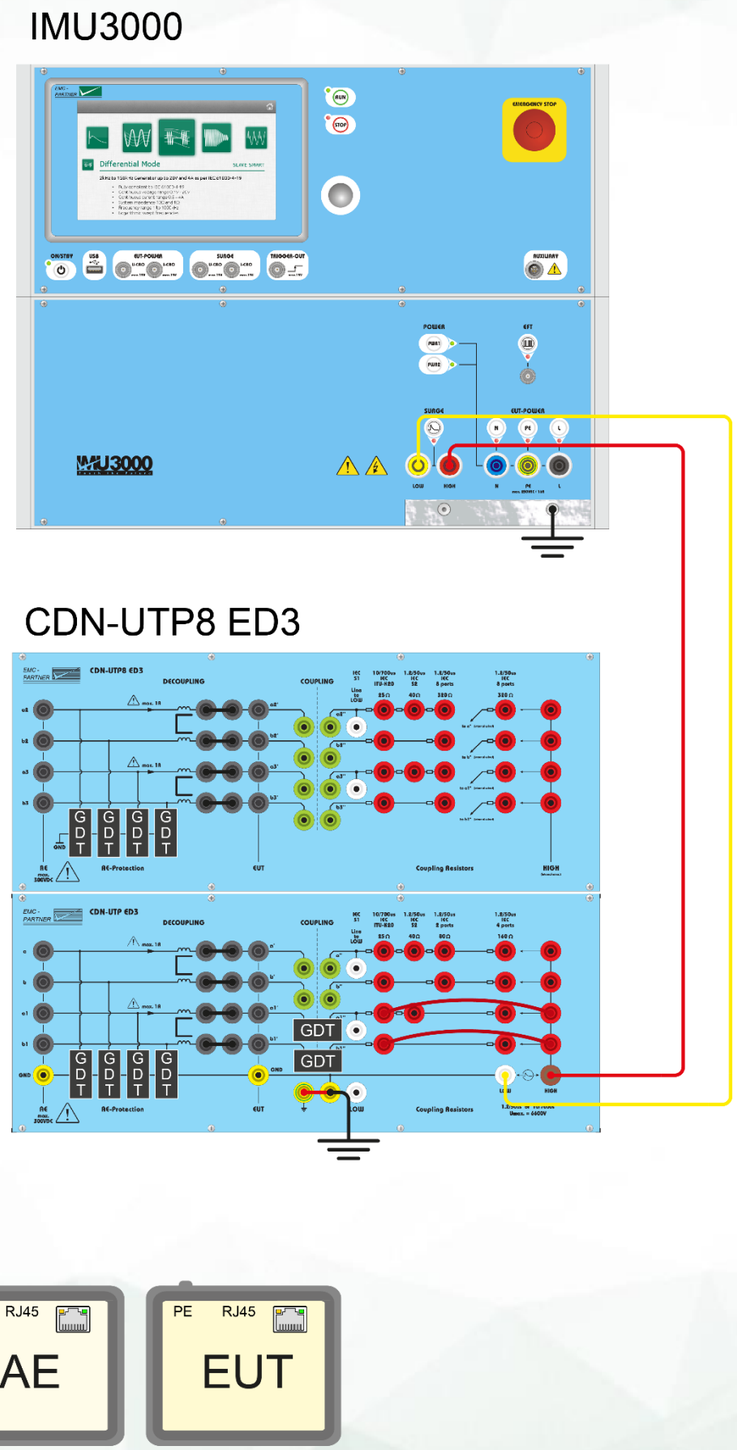

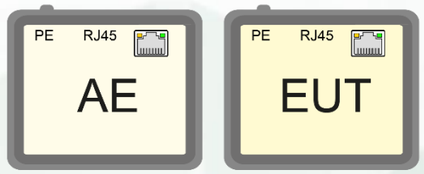

Coupling resistors, elements have to be connected, protection elements on AE side have to be connected.

1.4.8. Tel. surge: IMU3000 T/T6, CDN-UTP8 ED3, test setup for 2 sym. lines with Ethernet adapters, step two: prepare adapters and cables

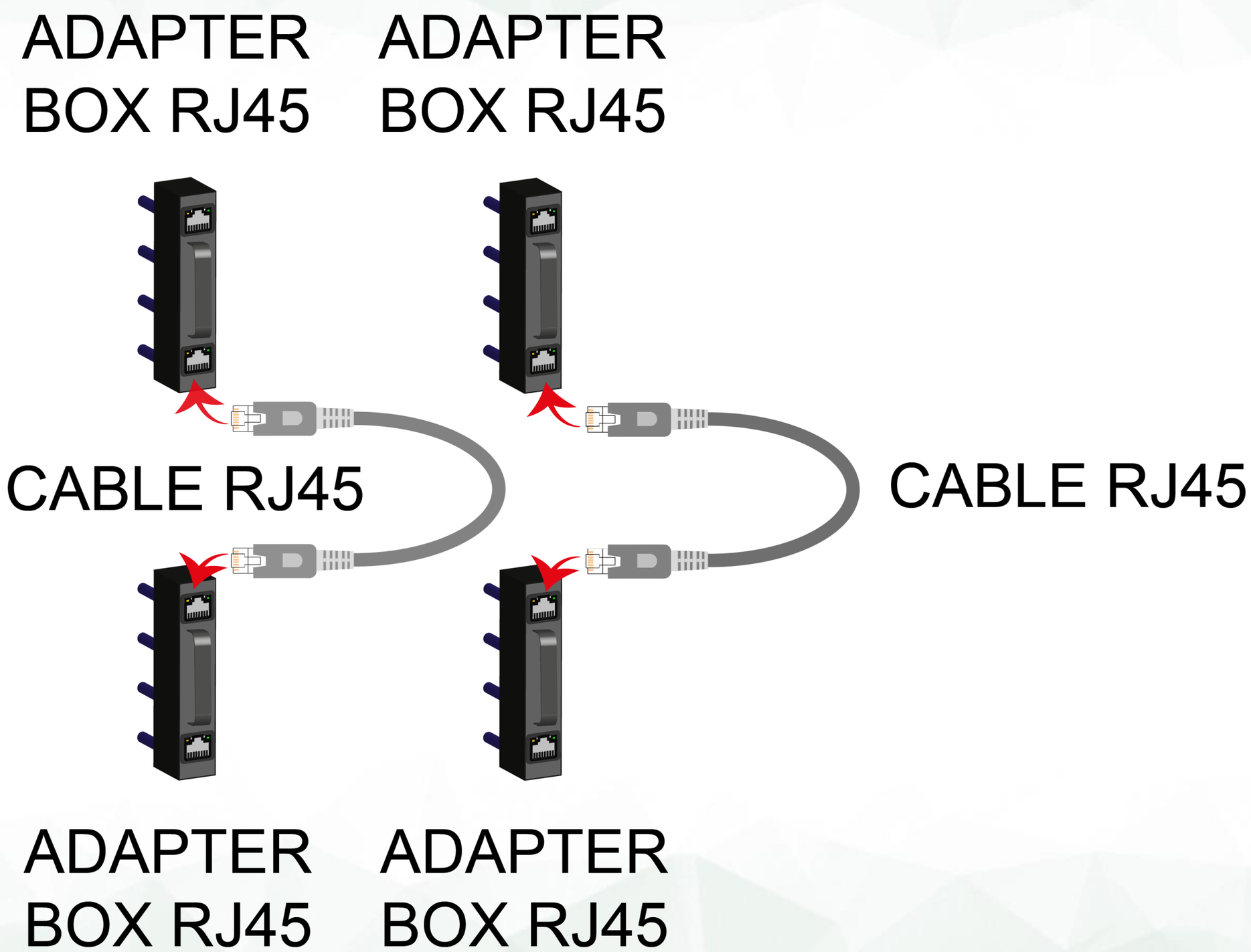

In order to maintain a high speed communication, special adapters are utilized.

1.4.9. Tel. surge: IMU3000 T/T6, CDN-UTP8 ED3, test setup for 2 sym. lines with Ethernet adapters, step three: connect adapters, cables, EUT and AE

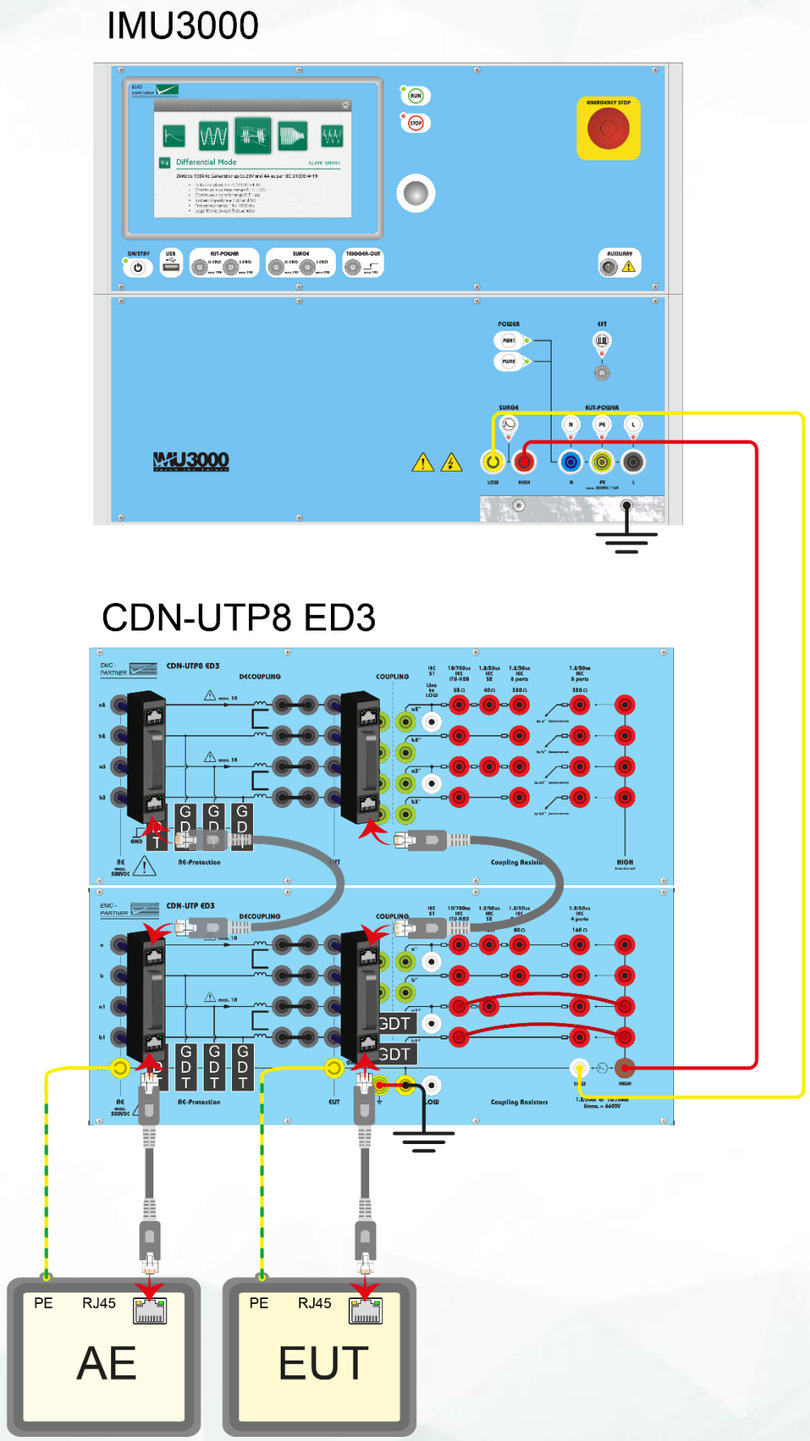

IEC 61000-4-5 Ed. 3 describes testing only 2 lines at a time.

IEC 61000-4-8
Edition 2.0 / 2009

Customer advantages:

* Norm levels achievable with the internal 5A variac

* Improved safety

* No high current cables from external transformer to the antenna

* Limitation of human body exposure to magnetic fields during test

1.5.1. Magnetic field 50/60 Hz: IMU3000 V, MF1000-1, calibration setup

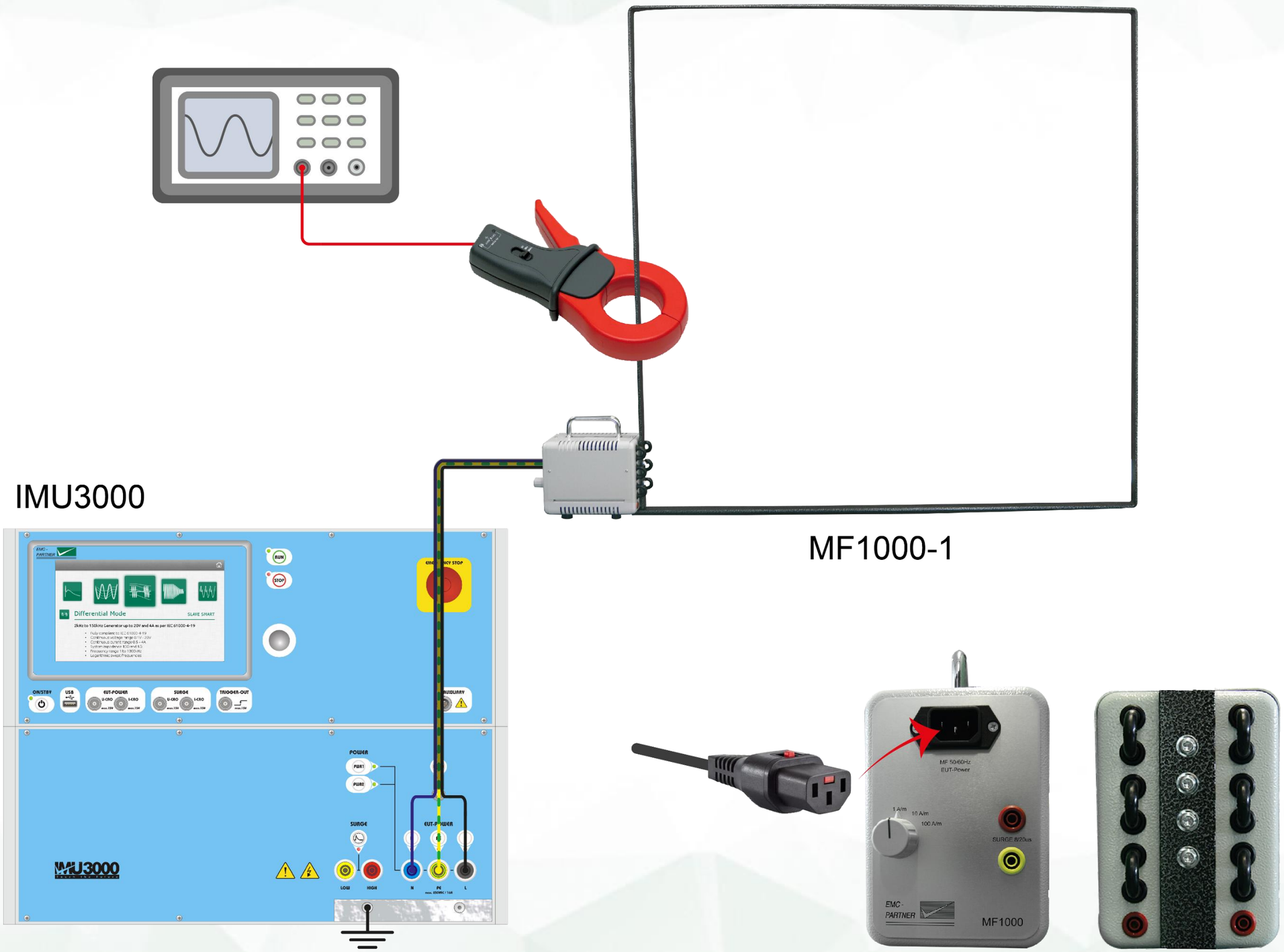

One winding antenna, calibration is possible with current clamp.

1.5.2. Magnetic field 50/60 Hz: IMU3000 V, MF1000-1, test setup

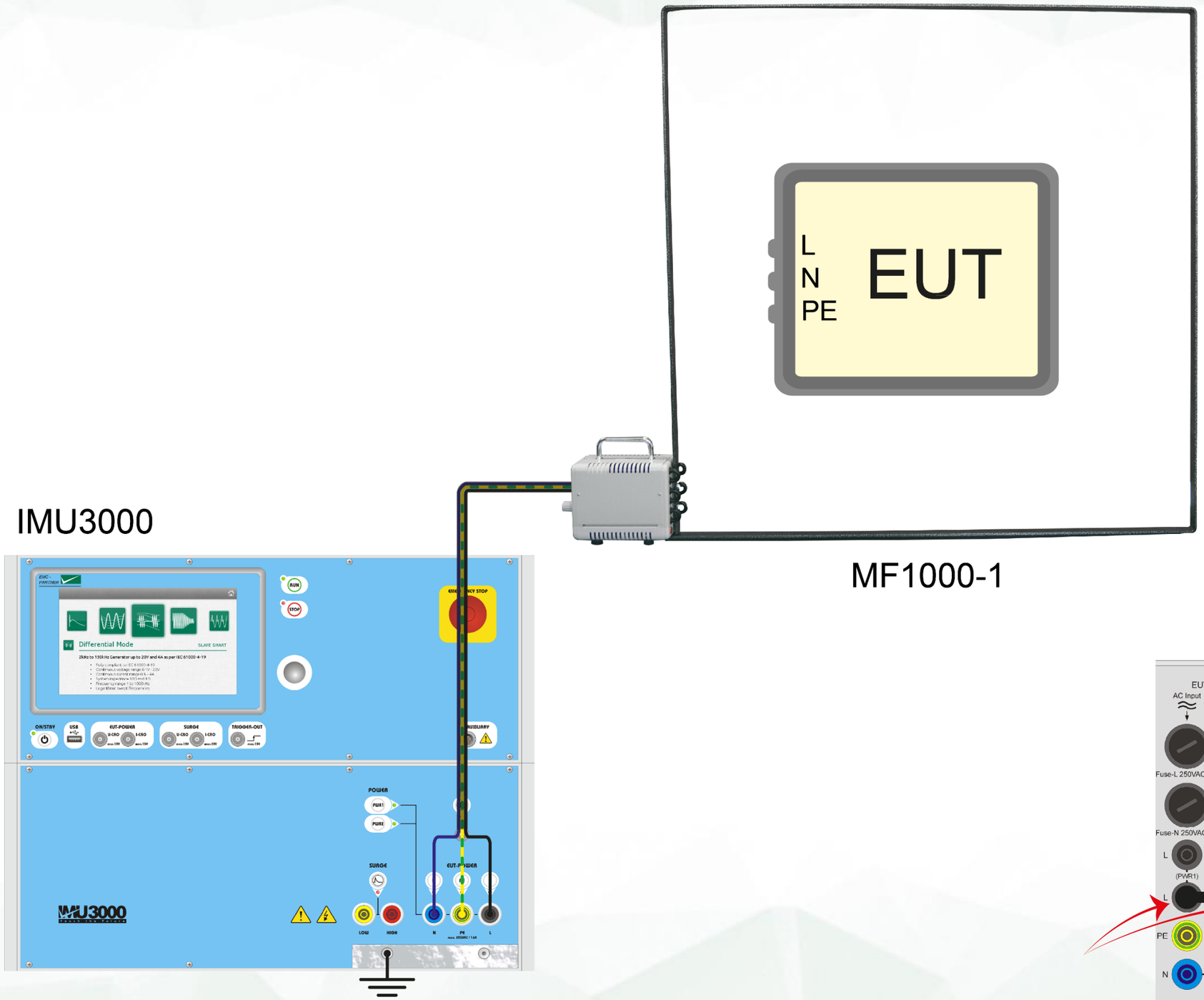

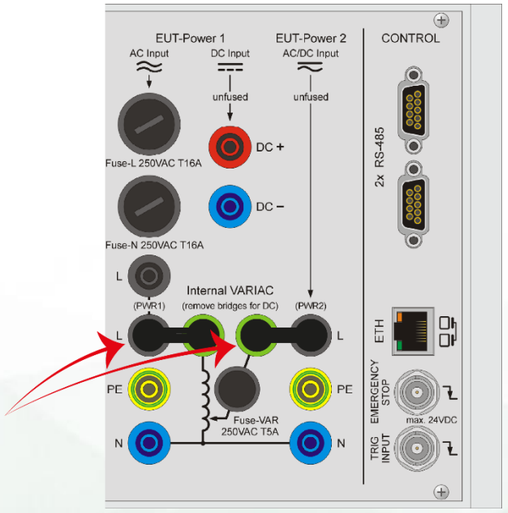

Alternative to internal variac, VAR-EXT1000 can be successfully utilized. With MF1000-1, continuous field strength up to 160 A/m can be reached.

1.5.3. Magnetic field 50/60 Hz: IMU3000 V, MF1000-2, calibration setup

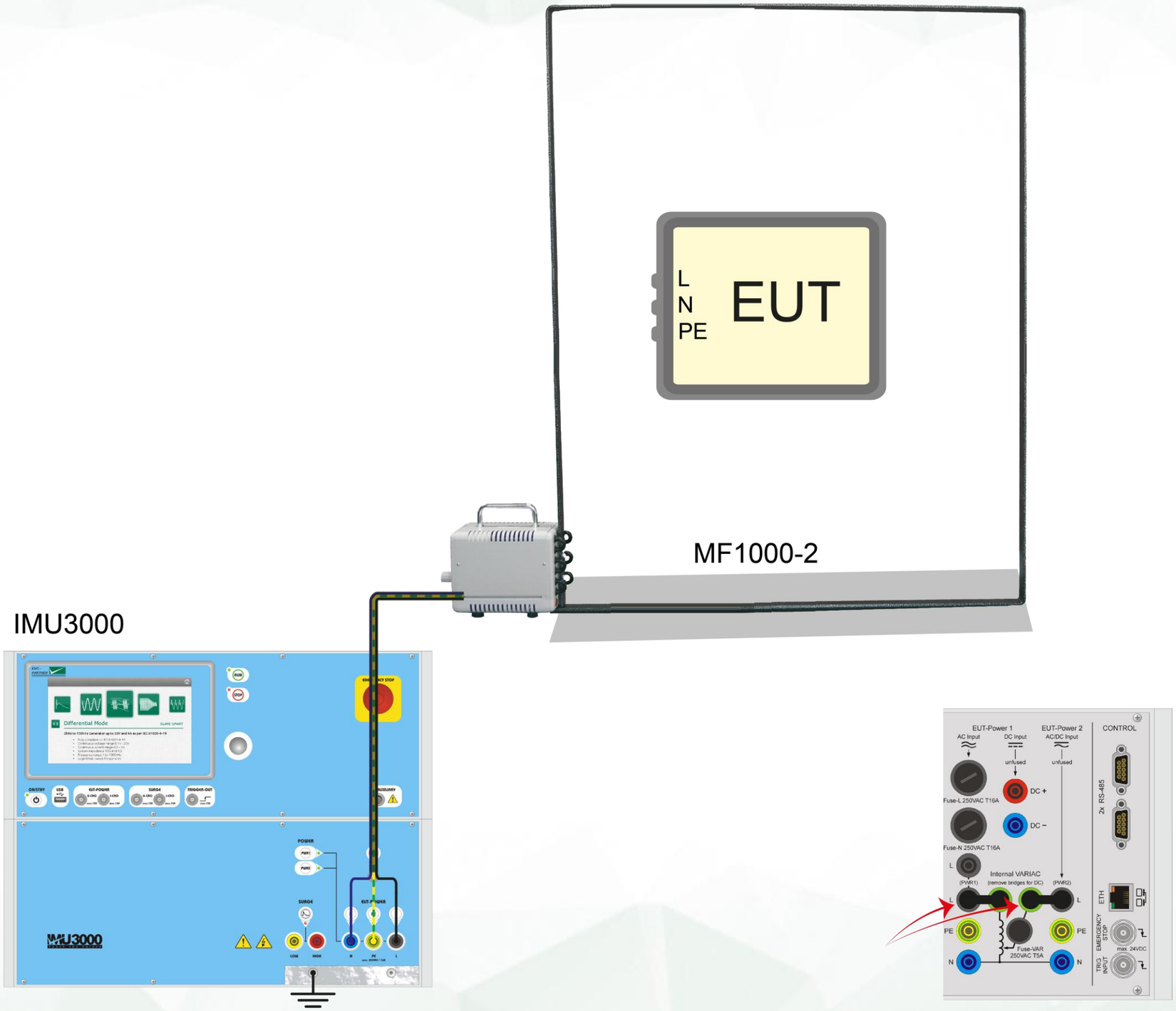

One winding antenna (1 m x 2.6 m), calibration is possible with current clamp.

1.5.4. Magnetic field 50/60 Hz: IMU3000 V, MF1000-2, test setup

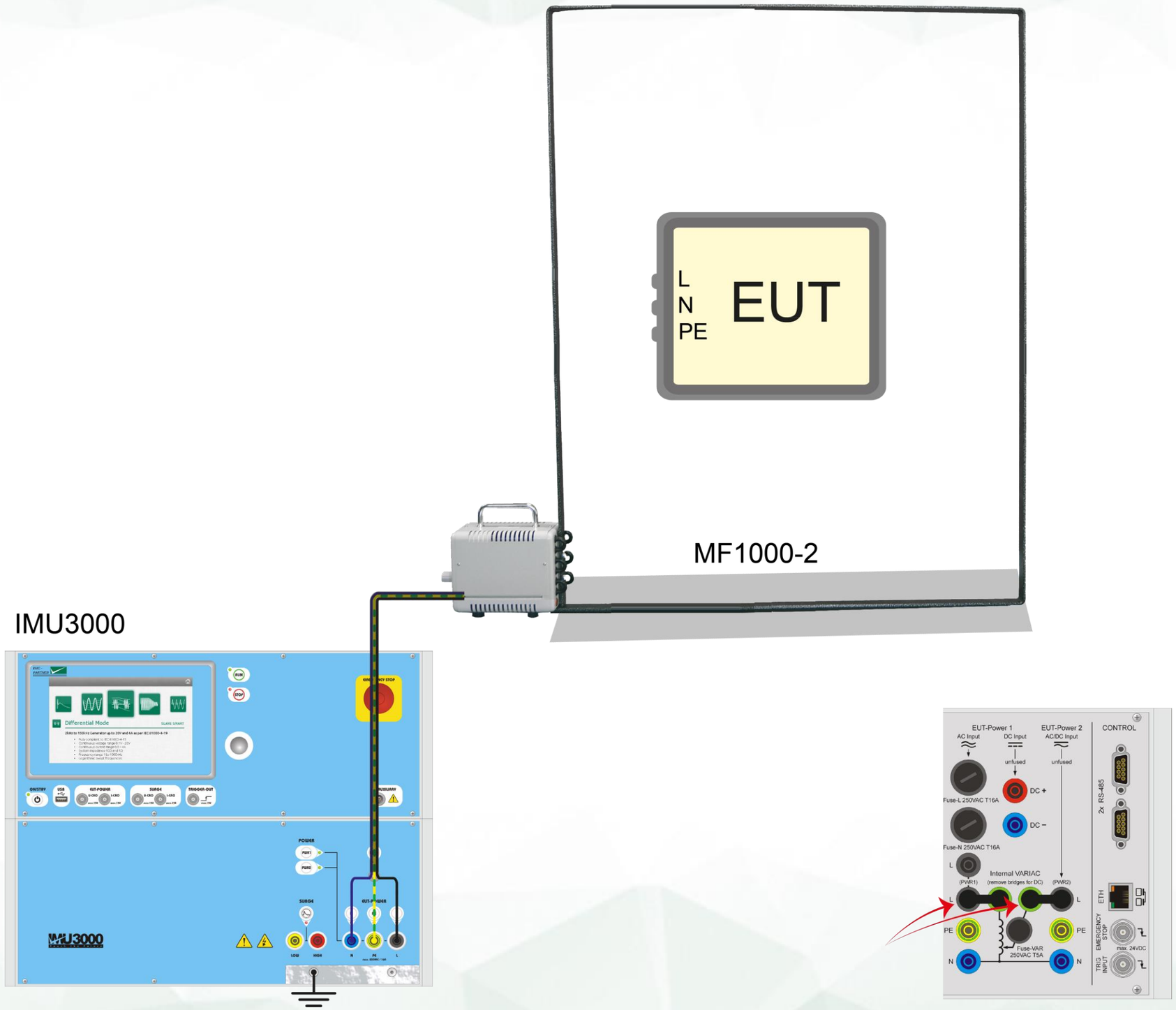

With MF1000-2, continuous field strength up to 110 A/m can be reached (but larger EUTs can be tested in comparison to MF1000-1).

1.5.5. Magnetic field 50/60 Hz: IMU3000 V, MF1000-3, calibration setup

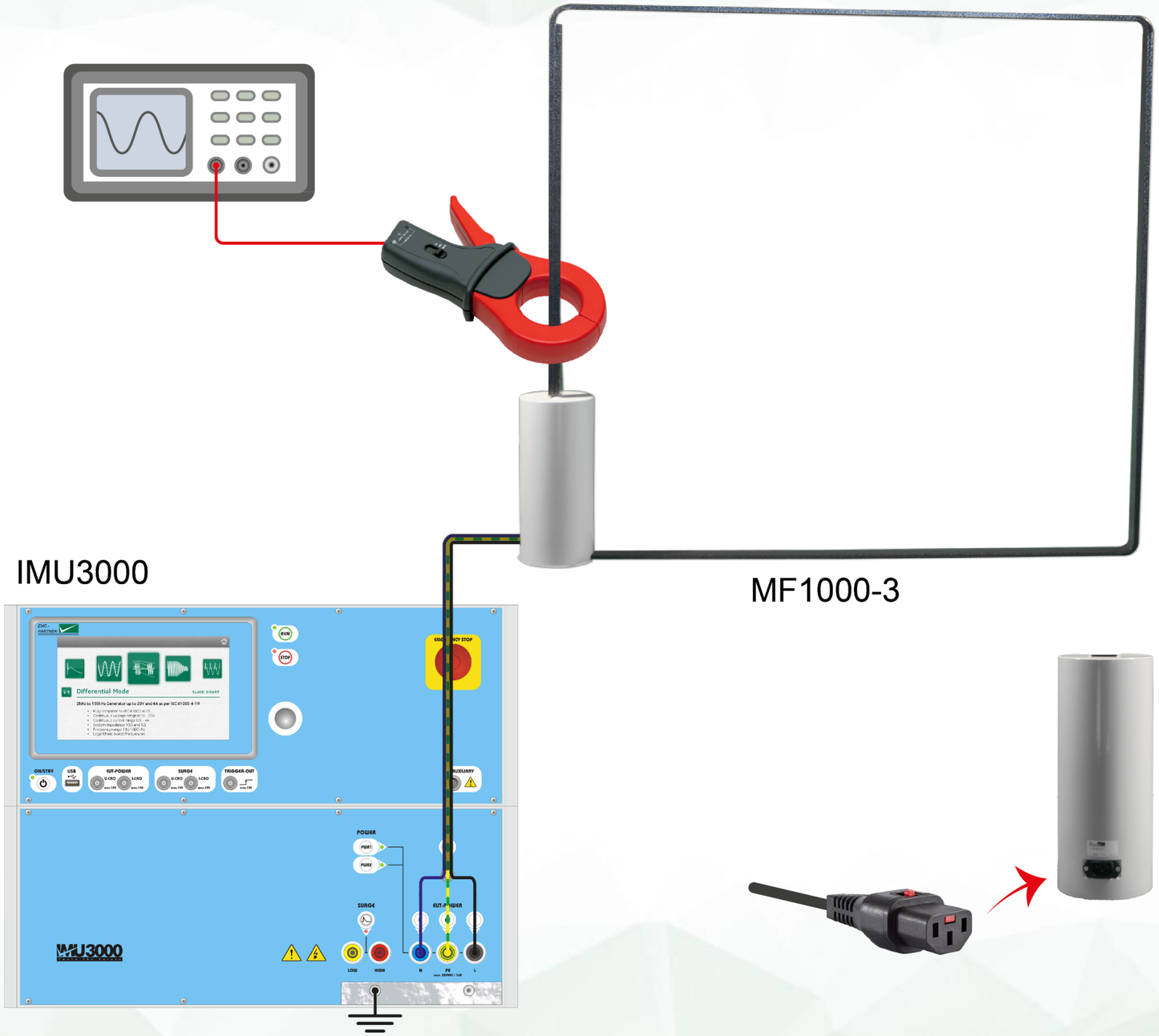

One winding antenna, calibration is possible with current clamp.

1.5.6. Magnetic field 50/60 Hz: IMU3000 V, MF1000-3, test setup

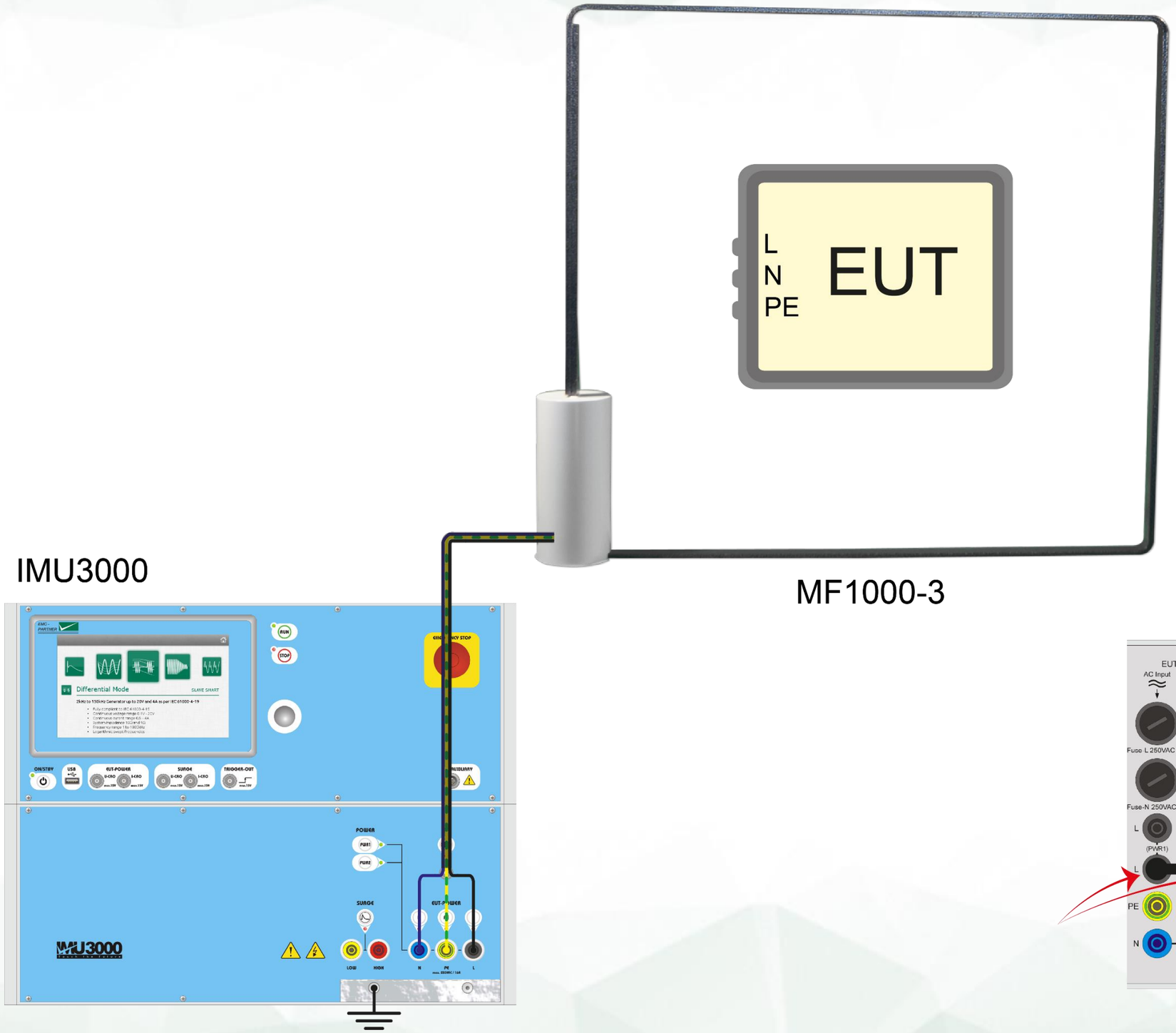

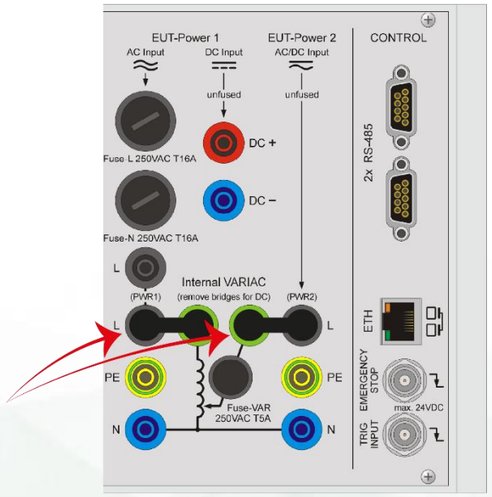

MF1000-3: *continuous* field strength 150 A/m – 500 A/m with either internal or external variac, *short term*: 150 A/m – 1100 A/m with both variacs.

IEC 61000-4-9
Edition 1.1 + AMD1 / 2008

Magnetic field pulse up to 1000 A/m
with MF1000-1 or MF1000-2

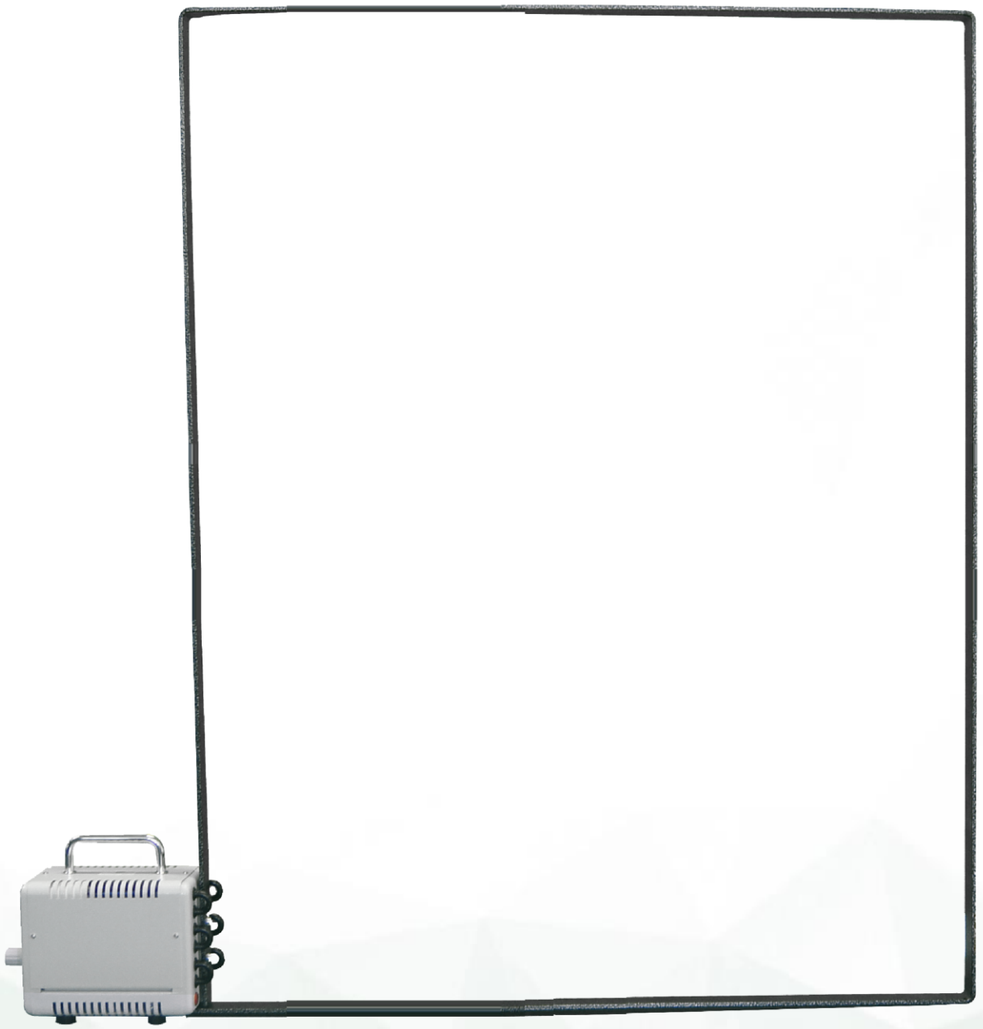

1.6.1. Magnetic pulse: IMU3000 S, MF1000-1, calibration setup

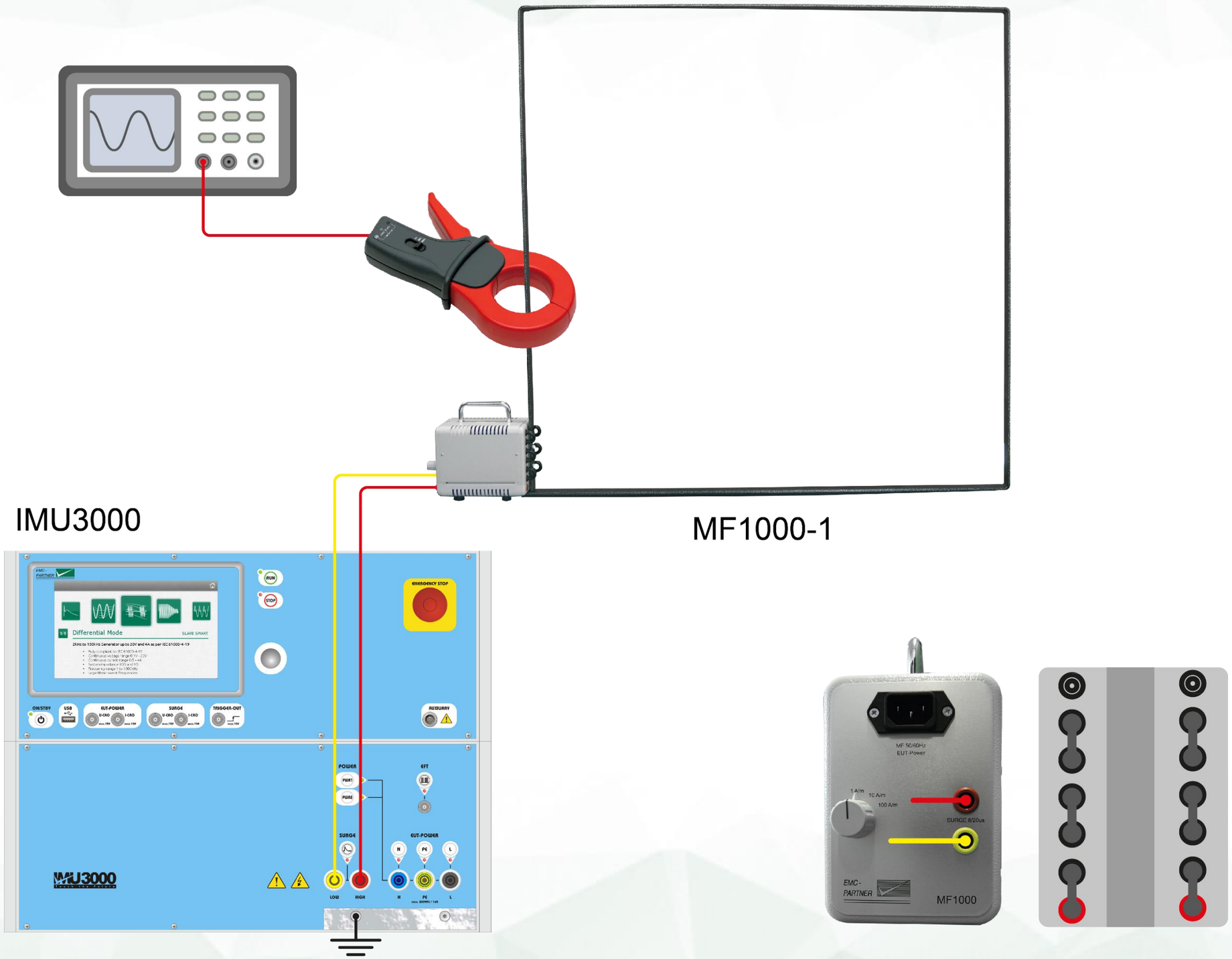

Magnetic pulse antenna is connected to direct surge output. Bridges on the antenna have to connected as described.

1.6.2. Magnetic pulse: IMU3000 S, MF1000-1, test setup

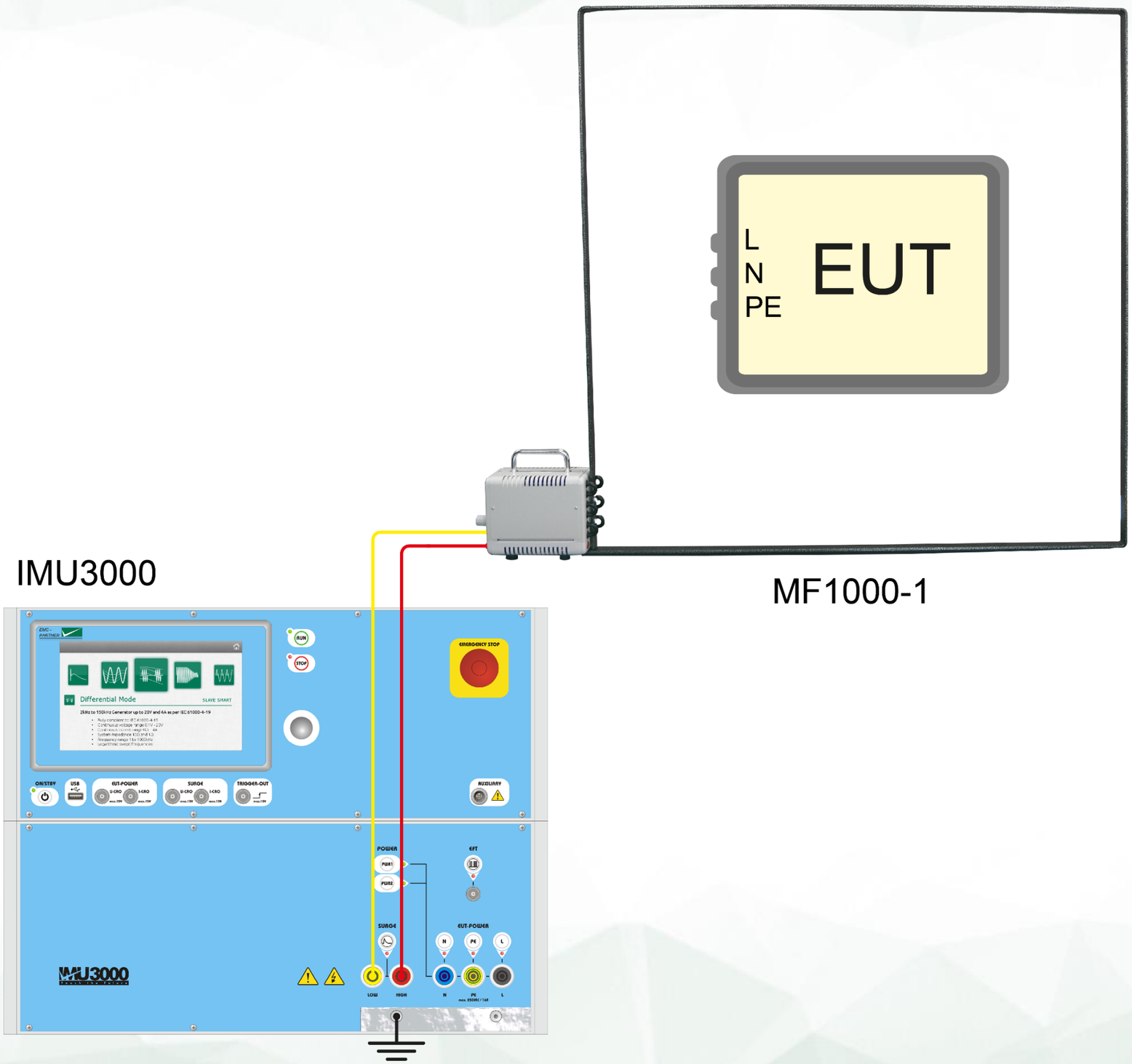

With MF1000-1, pulses in the range 90 A/m – 1400 A/m can be reached.

1.6.3. Magnetic pulse: IMU3000 S, MF1000-2, calibration setup

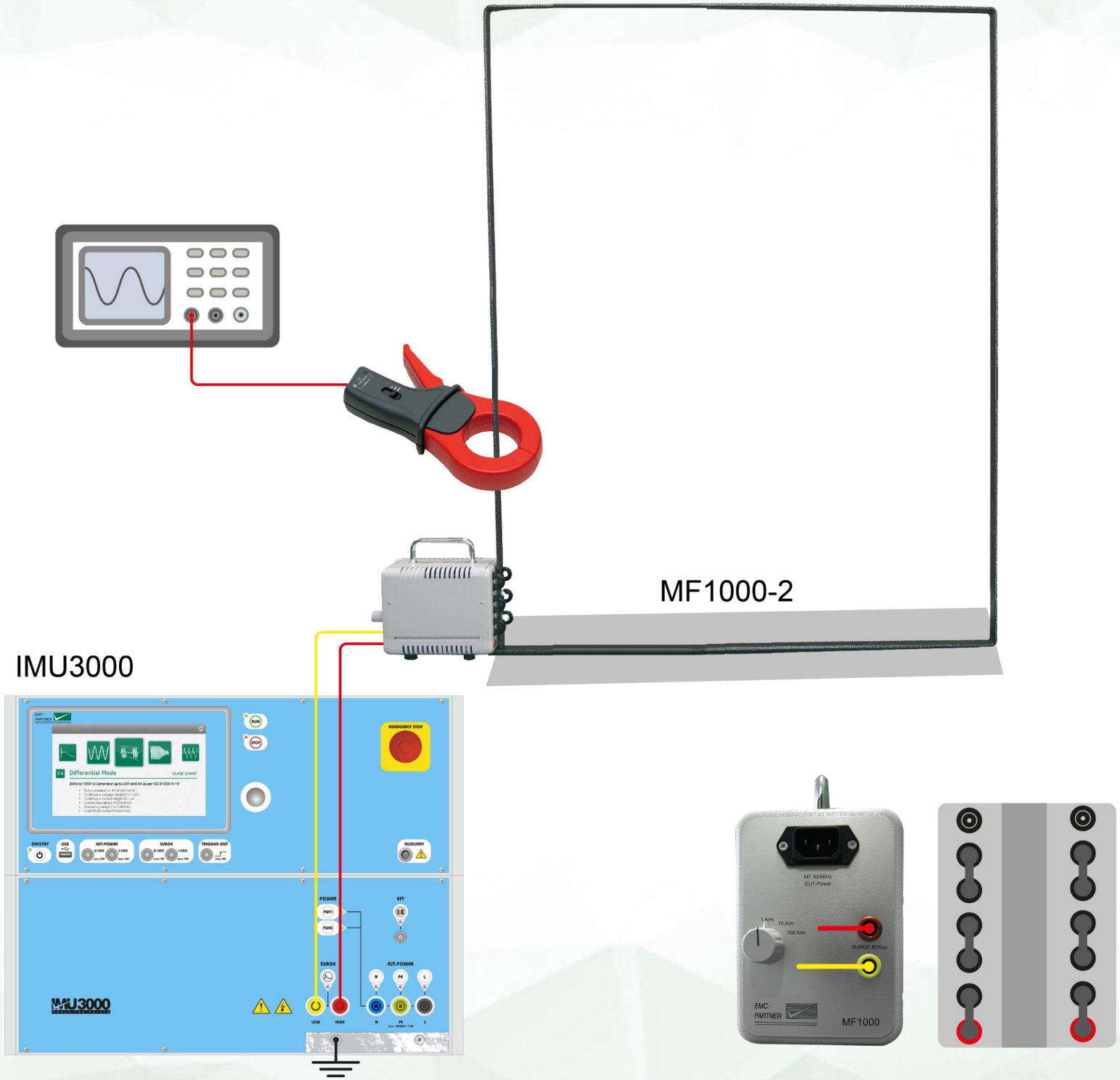

Magnetic pulse antenna is connected to direct surge output. Bridges on the antenna have to connected as described.

1.6.4. Magnetic pulse: IMU3000 S, MF1000-2, test setup

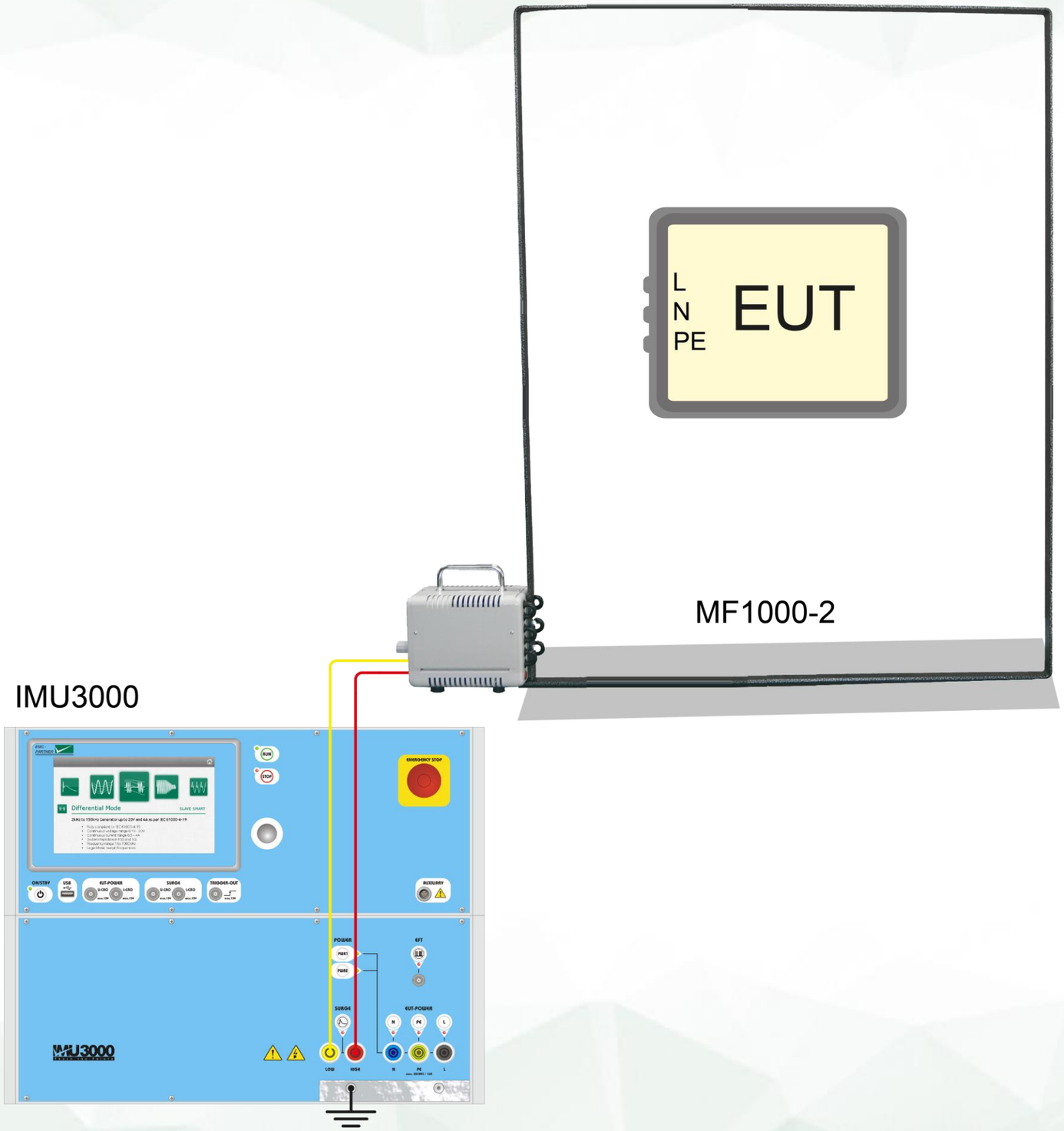

With MF1000-2, pulses in the range 63 A/m – 1025 A/m can be reached (but larger EUTs can be tested in comparison to MF1000-1).

IEC 61000-4-11 Edition 2.0 / 2004	IEC 61000-4-34 Edition 1.0 + AMD1 / 2009
EUT current < 16 A	16 A < EUT current < 75 A

Dips, interruptions and variations
on power supply lines

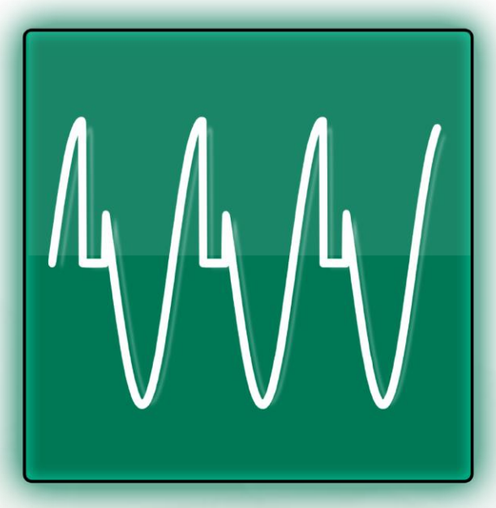

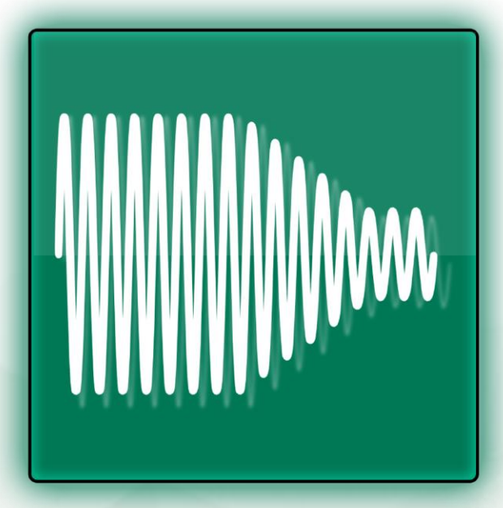

1.7.1. Int., dips, var.: IMU3000 D-V (internal variac 5A), inrush current calibration setup

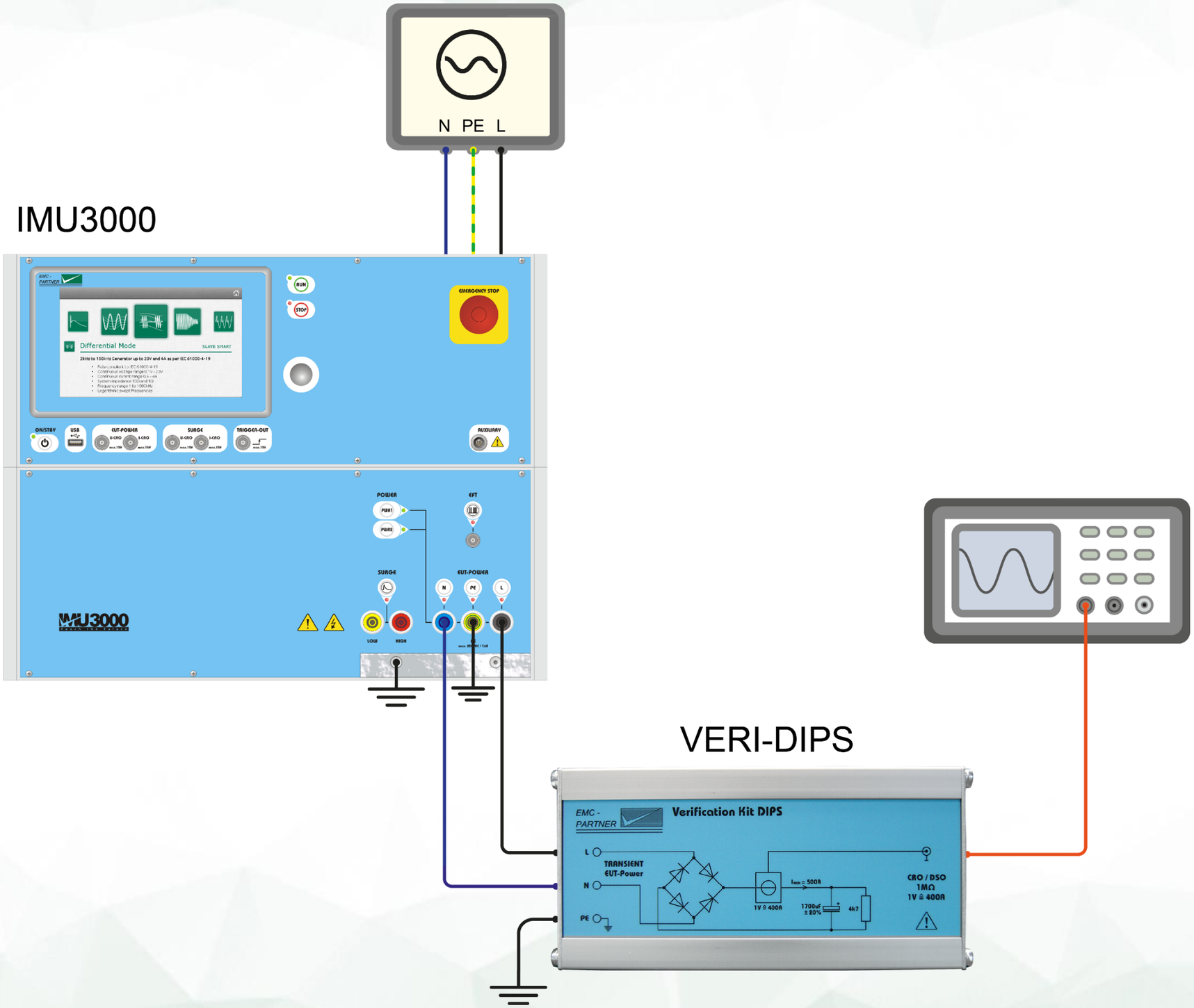

Inrush current is depending also on building's supply network, it should be measured before each test.

1.7.2. Int., dips, var.: IMU3000 D-V (internal variac 5A), switch time calibration setup

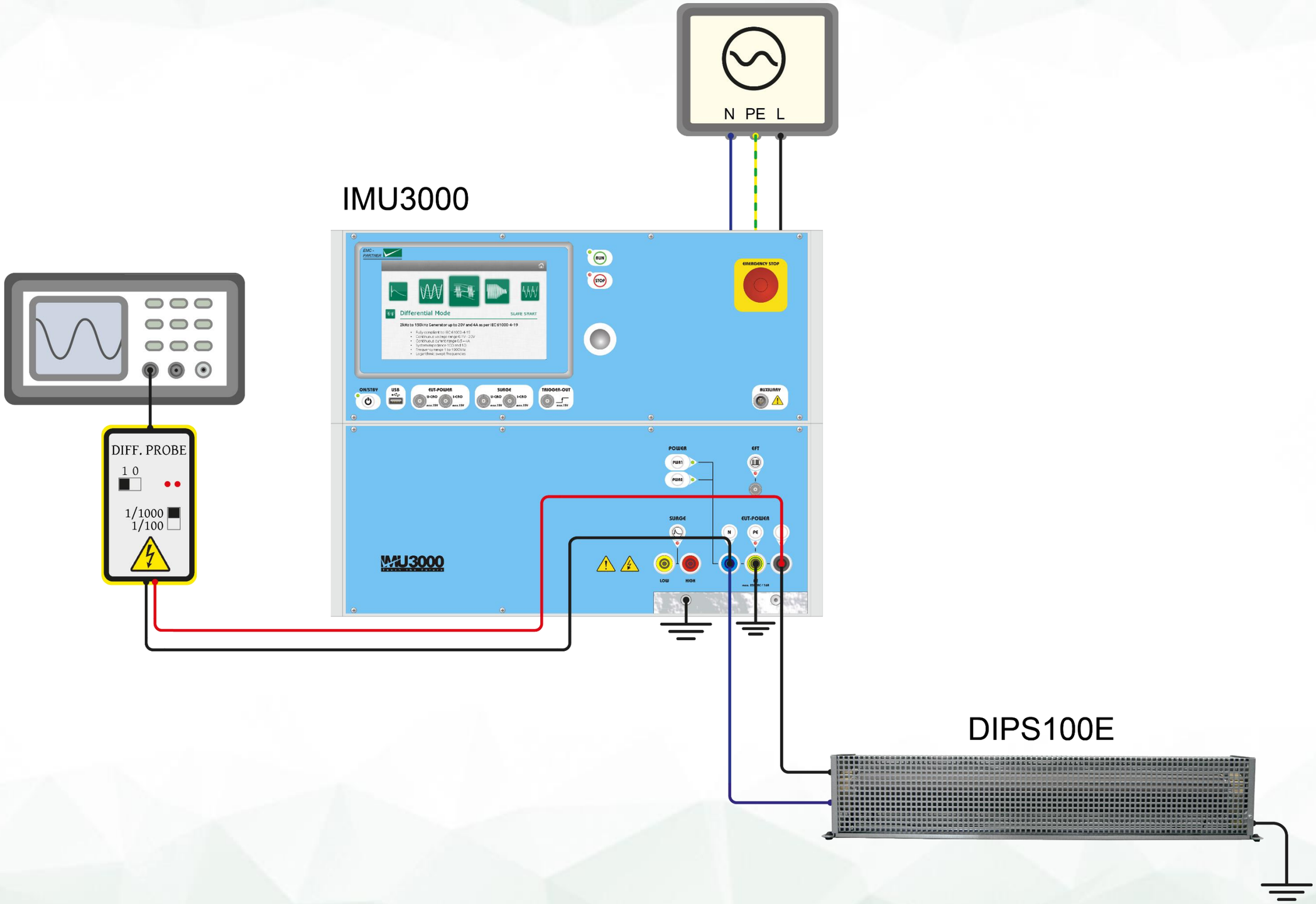

Switching time has to be measured into a 100 Ω load: 1…5 µs.

1.7.3. Int., dips, var.: IMU3000 D-V (internal variac 5A), test setup

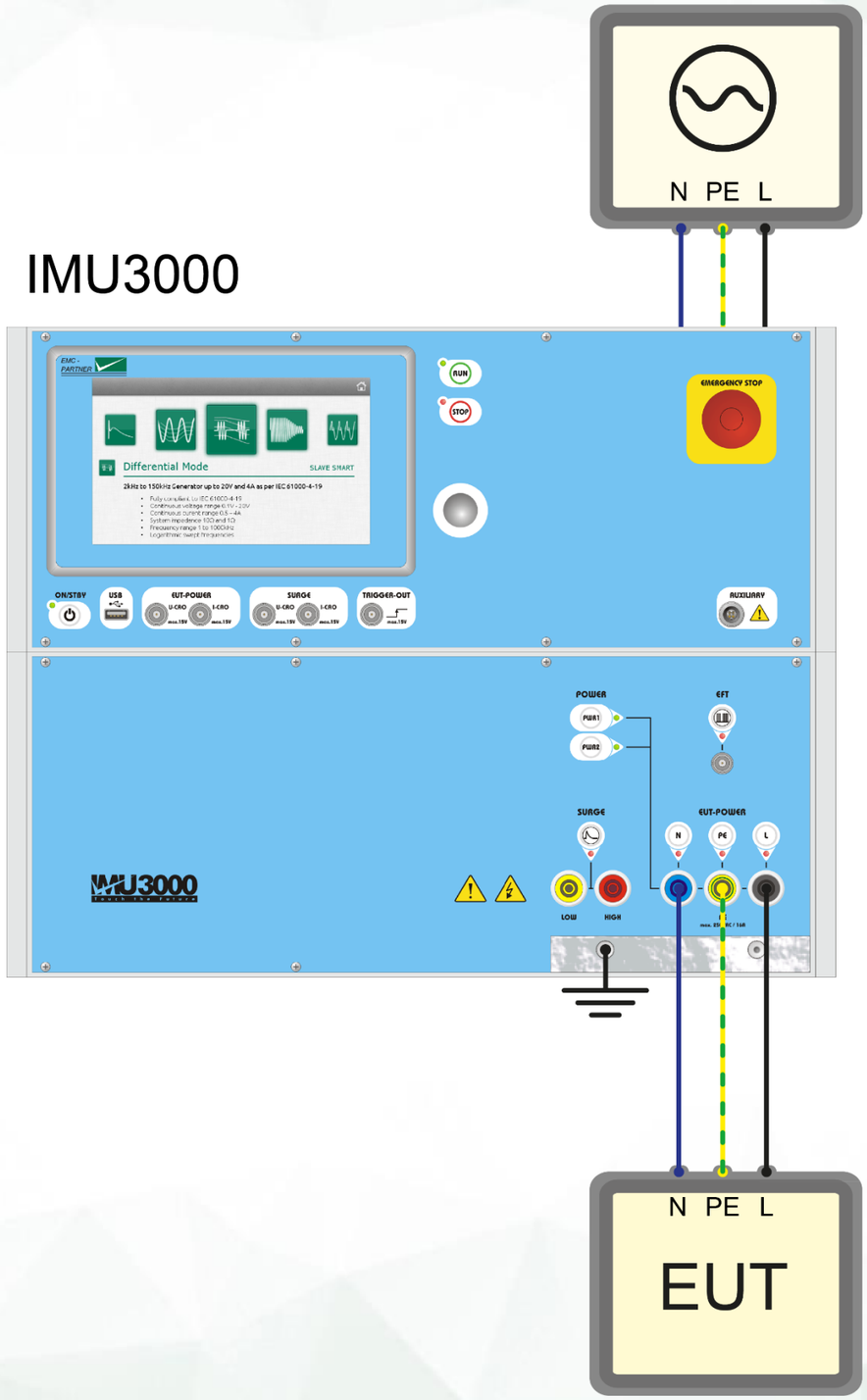

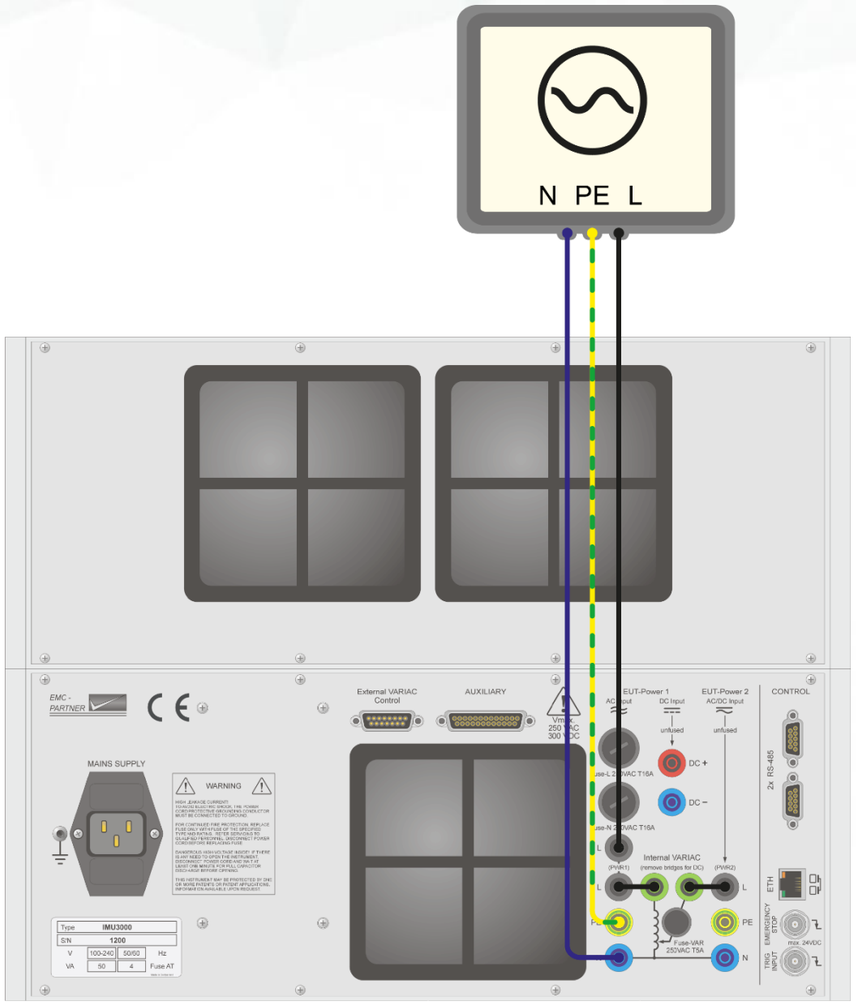

Bridges have to be connect correspondingly on the back panel of the generator (also during calibration).

1.7.4. Int., dips, var.: IMU3000 D, VAR-EXT1000 (16A), inrush current calibration setup

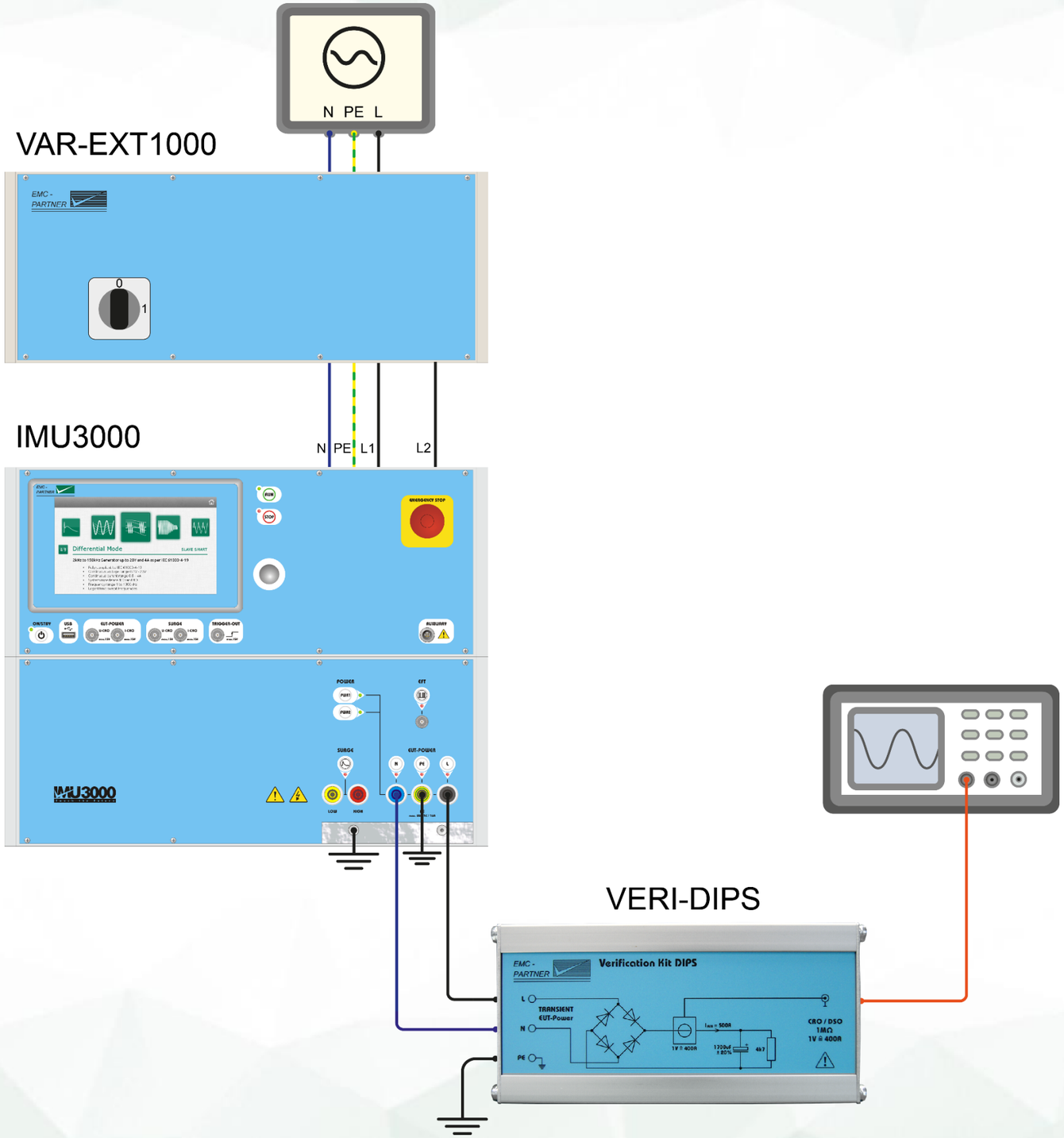

Inrush current is depending also on building's supply network, it should be measured before each test.

1.7.5. Int., dips, var.: IMU3000 D, VAR-EXT1000 (16A), switch time calibration setup

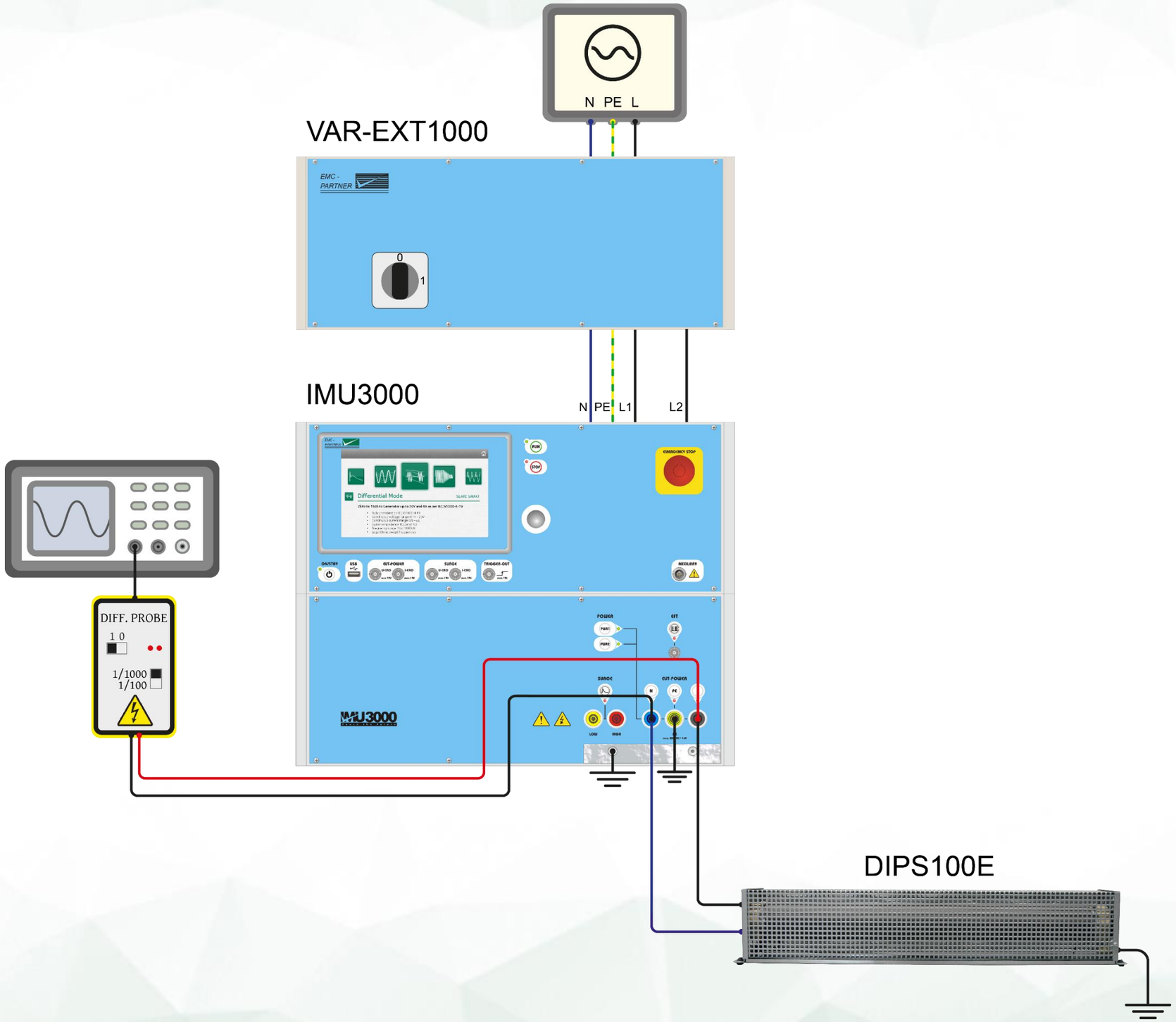

Switching time has to be measured into a 100 Ω load: 1…5 µs.

1.7.6. Int., dips, var.: IMU3000 D, VAR-EXT1000 (16A), test setup

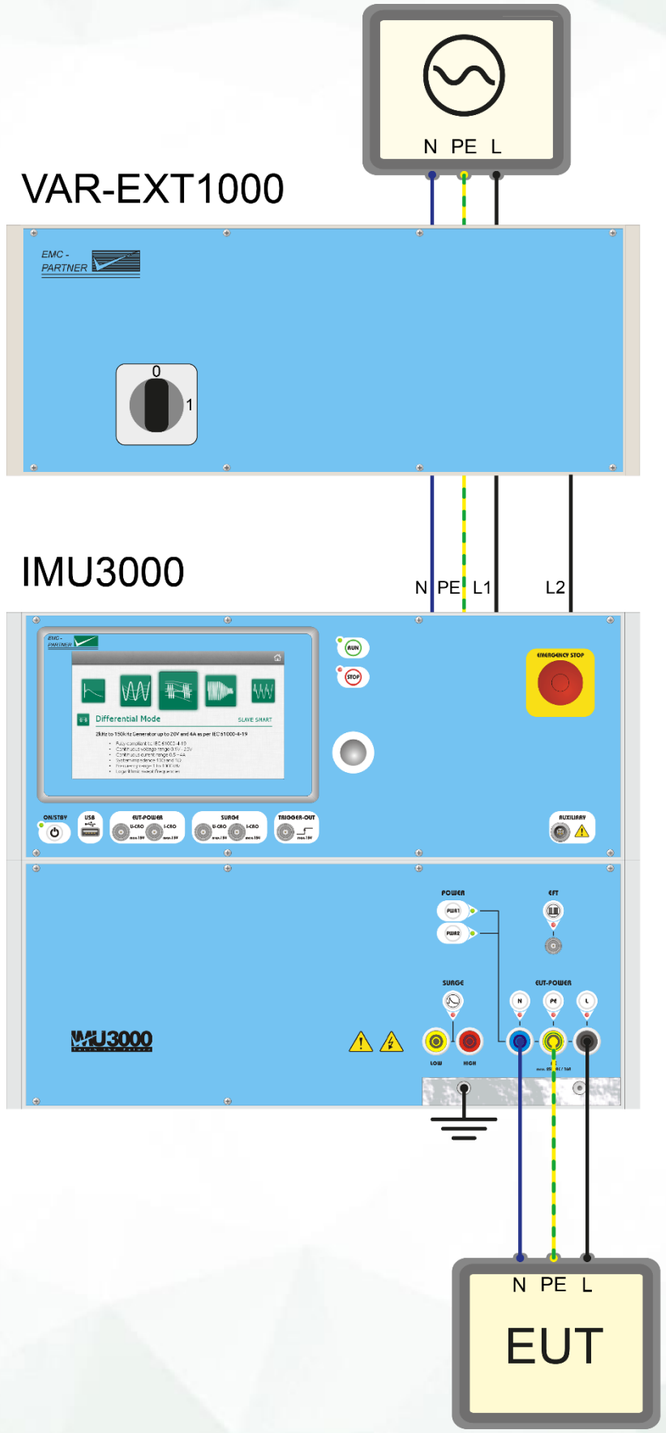

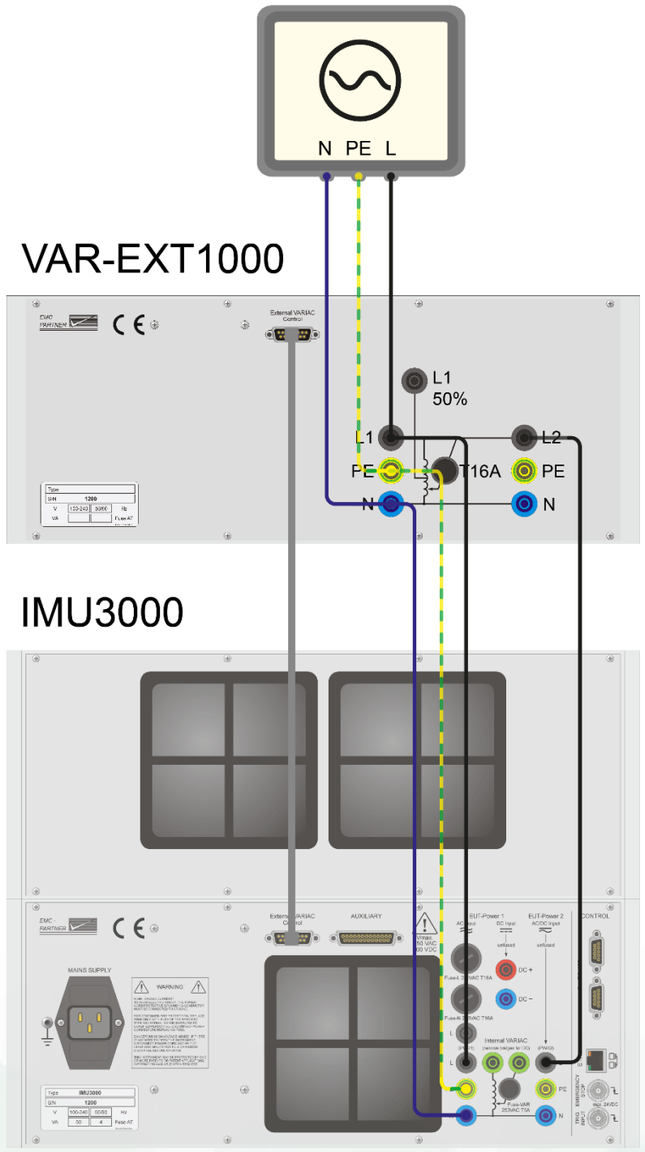

Bridges that concern internal variac have to be removed on the back panel of the generator.

1.7.7. Int., dips, var.: IMU3000 D, PFS 32, SCR32-AMD1 (also valid for PFS63+SRC63 and PFS75+SRC75 all models), inrush current calibration setup

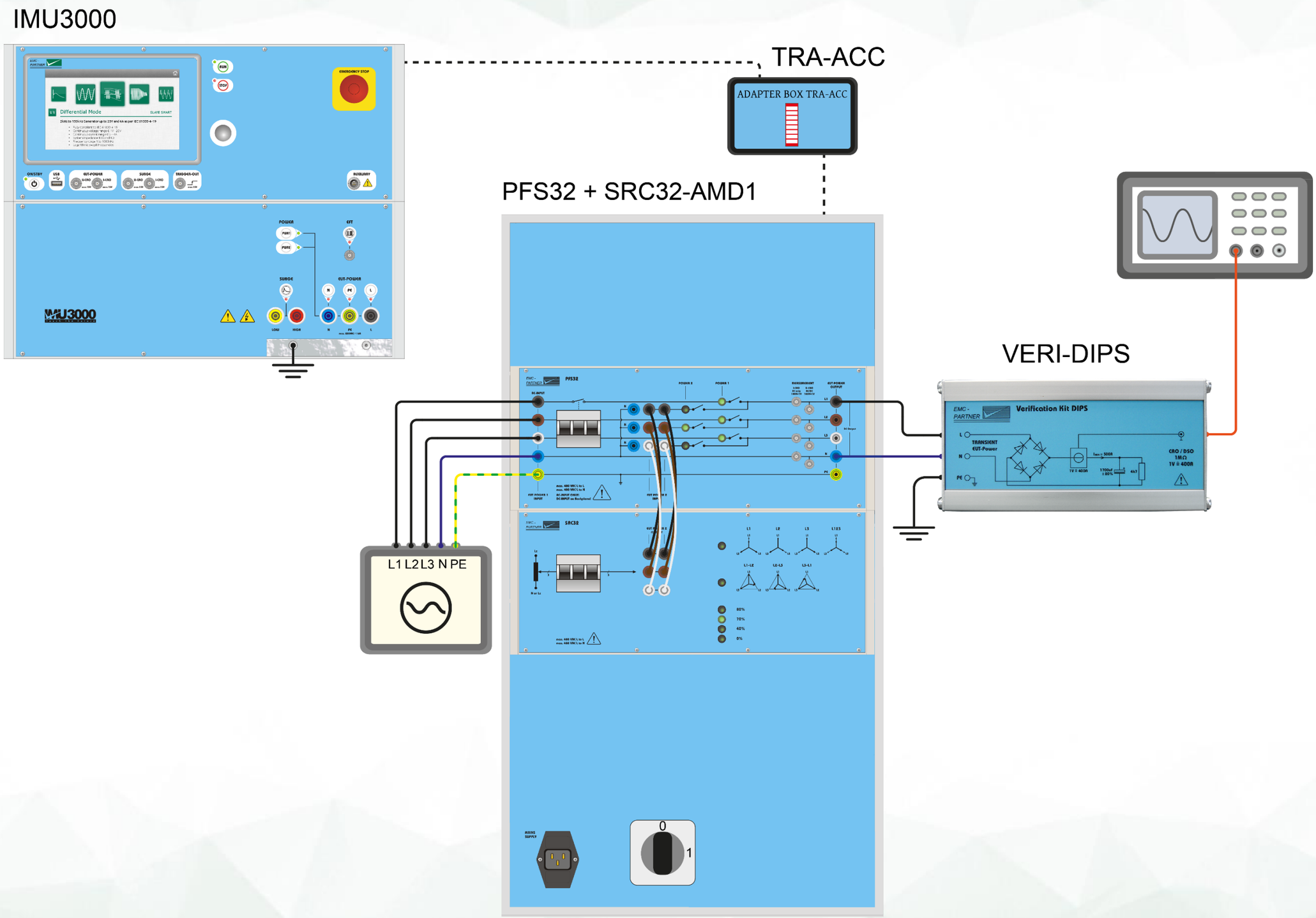

All coupling paths are calibrated successively.

1.7.8. Int., dips, var.: IMU3000 D, PFS 32, SCR32-AMD1 (also valid for PFS63+SRC63 and PFS75+SRC75 all models), switch time calibration setup

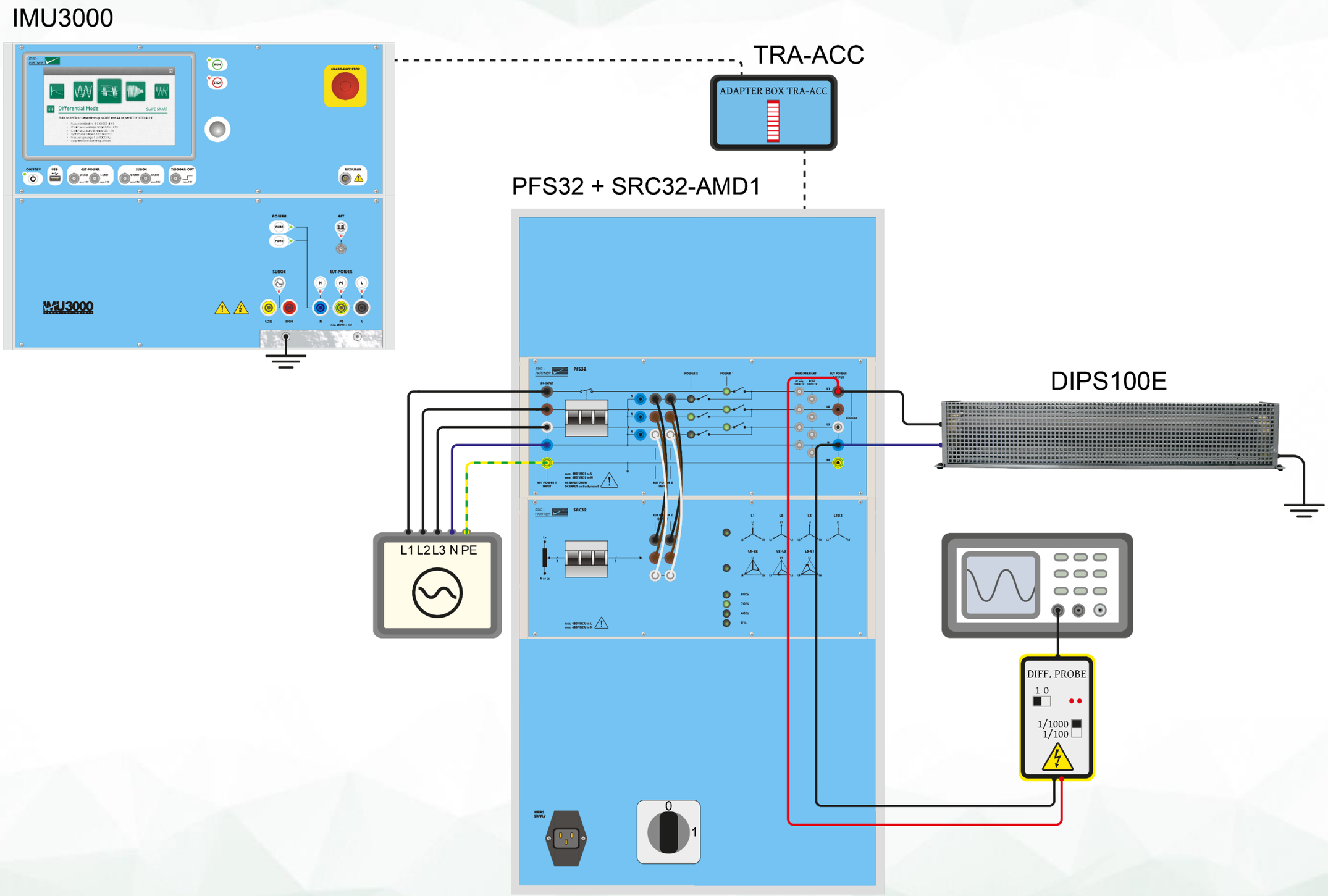

Switching time has to be measured into a 100 Ω load: 1…5 µs.

1.7.9. Int., dips, var.: IMU3000 D, PFS 32, SCR32-AMD1 (also valid for PFS63+SRC63 and PFS75+SRC75 all models), test setup

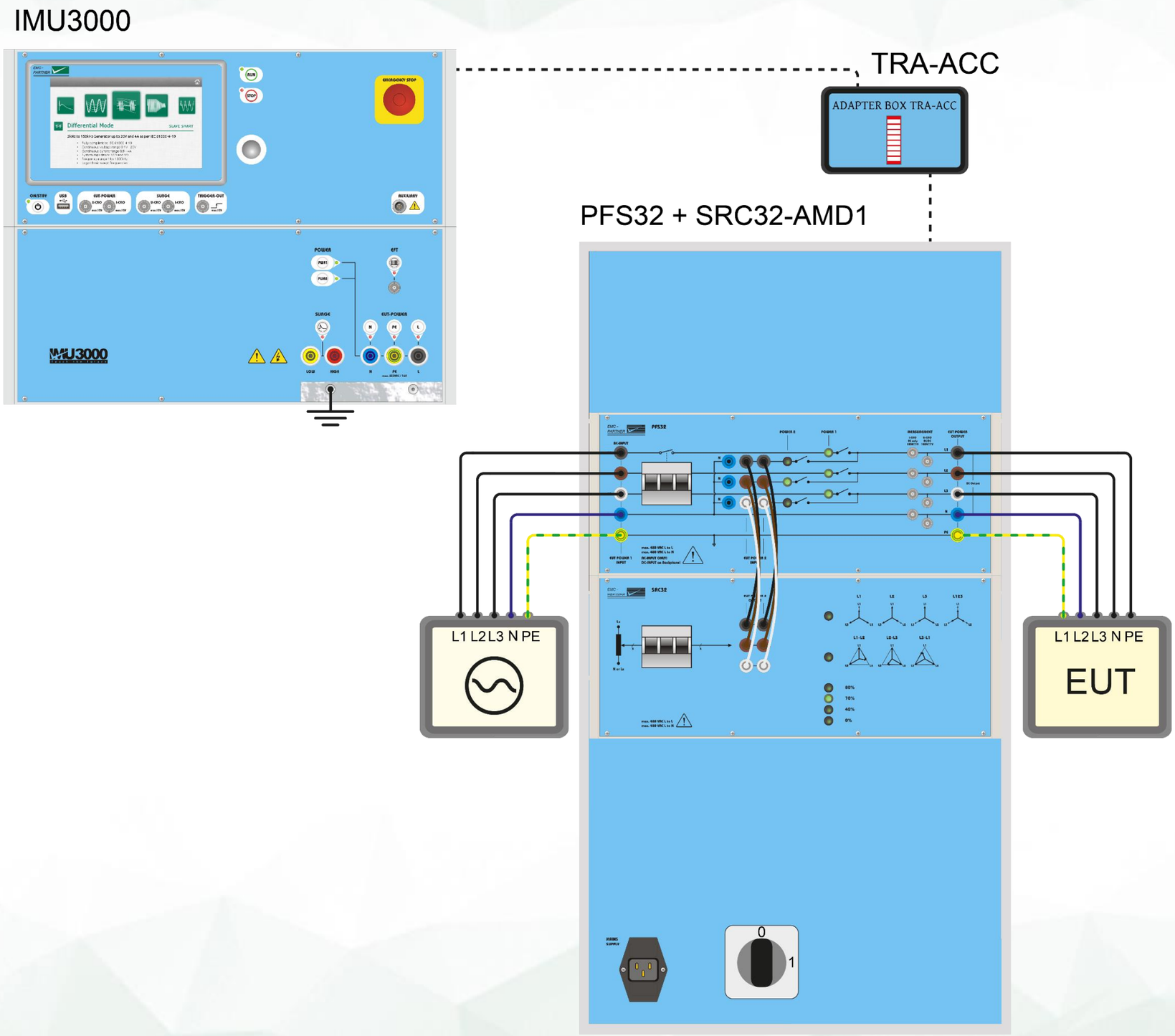

Synchronization possible for both star and delta connections.

IEC 61000-4-12
Edition 2.0 / 2006

Ring wave, norm requirements:

* Maximum voltage: 4 kV
* Ring frequency: 100 kHz
* Output impedance of the generator: 12 Ω and 30 Ω
* Calibration in open circuit and short circuit

IMU3000

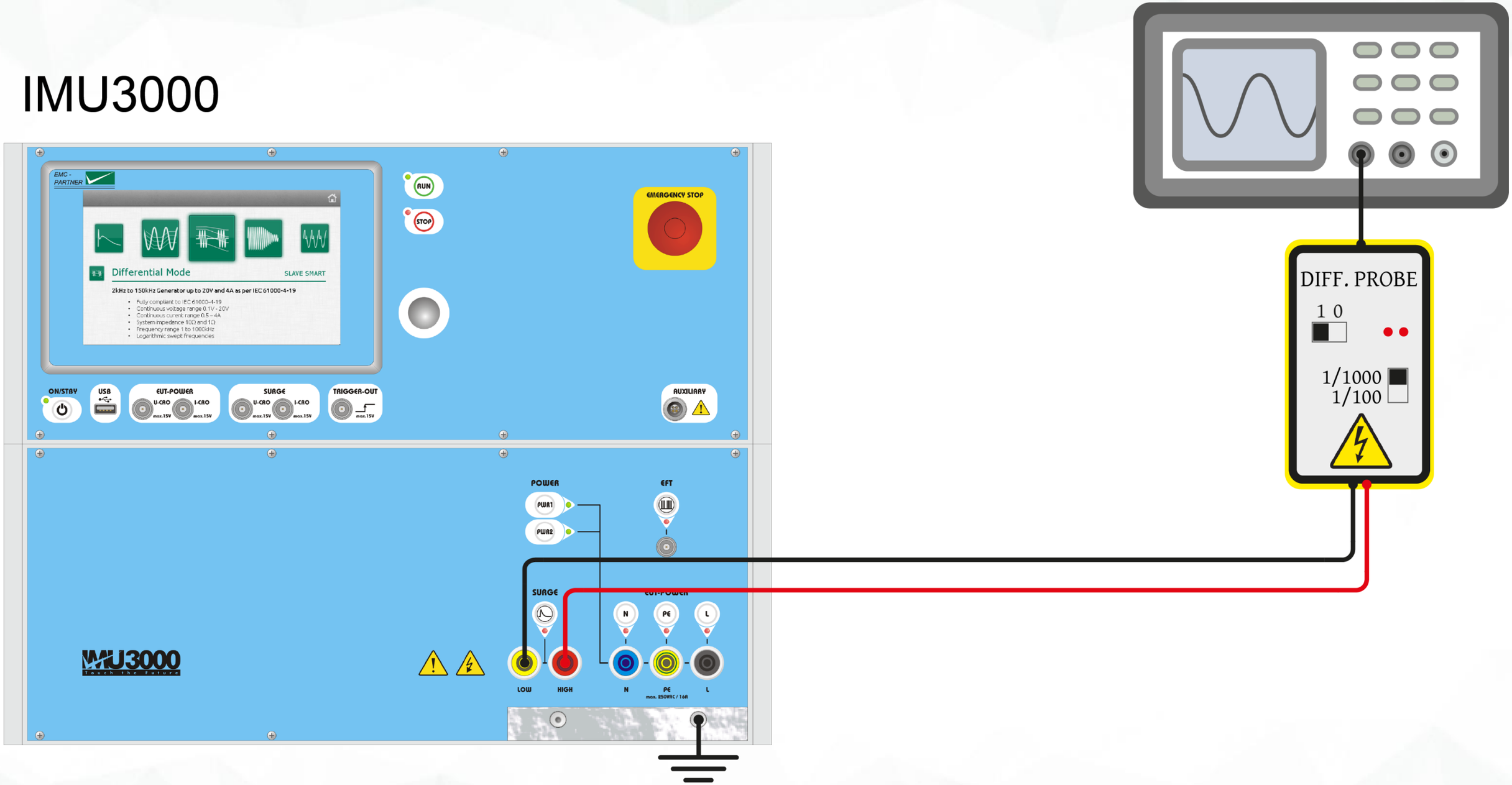

Both 12 Ω and 30 Ω output modes must be calibrated.

1.8.2. RWG: IMU3000 R/R6, direct output, current calibration setup

IMU3000

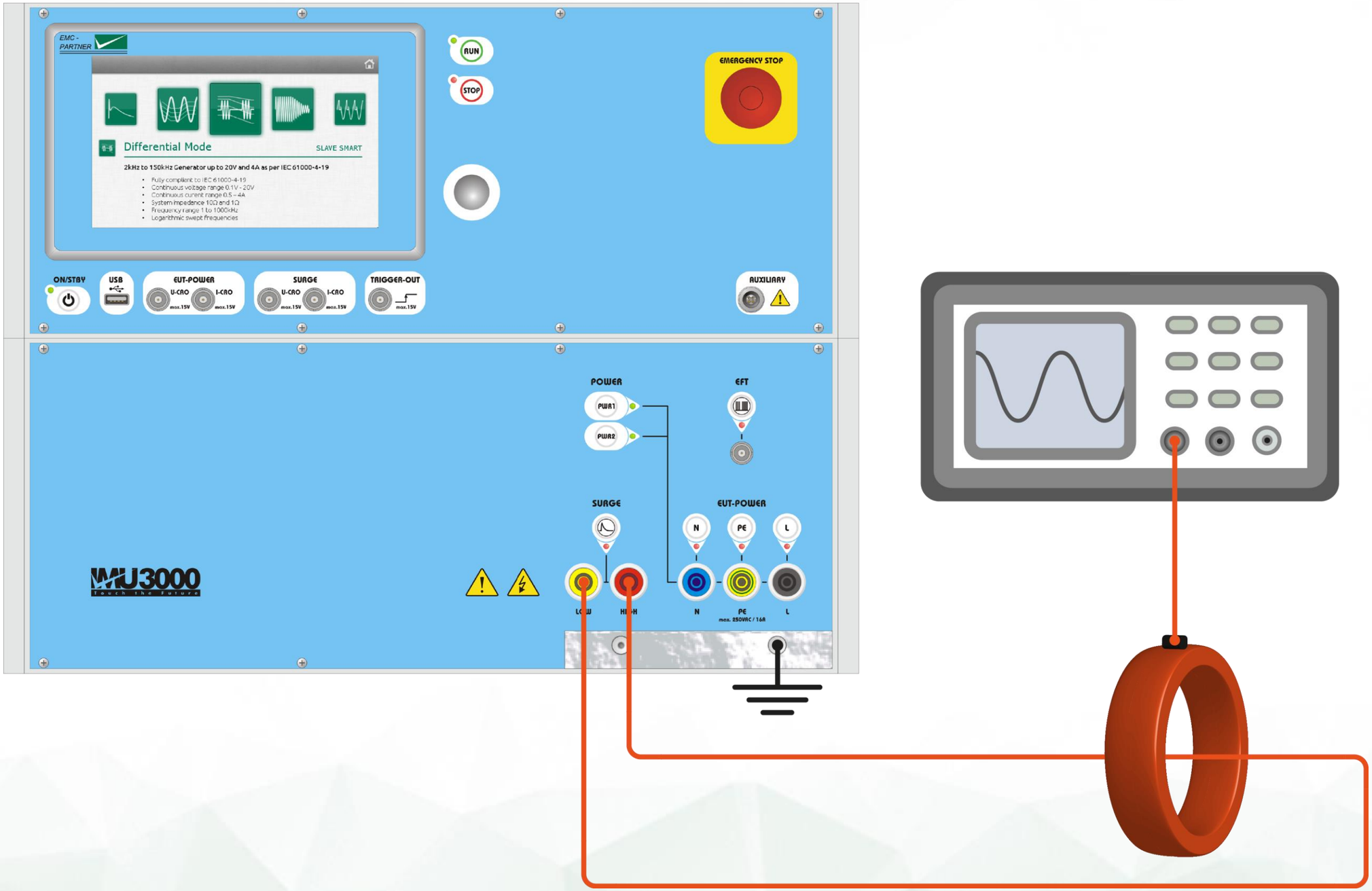

Both 12 Ω and 30 Ω output modes must be calibrated.

1.8.3. RWG: IMU3000 R/R6, internal CDN, voltage calibration setup

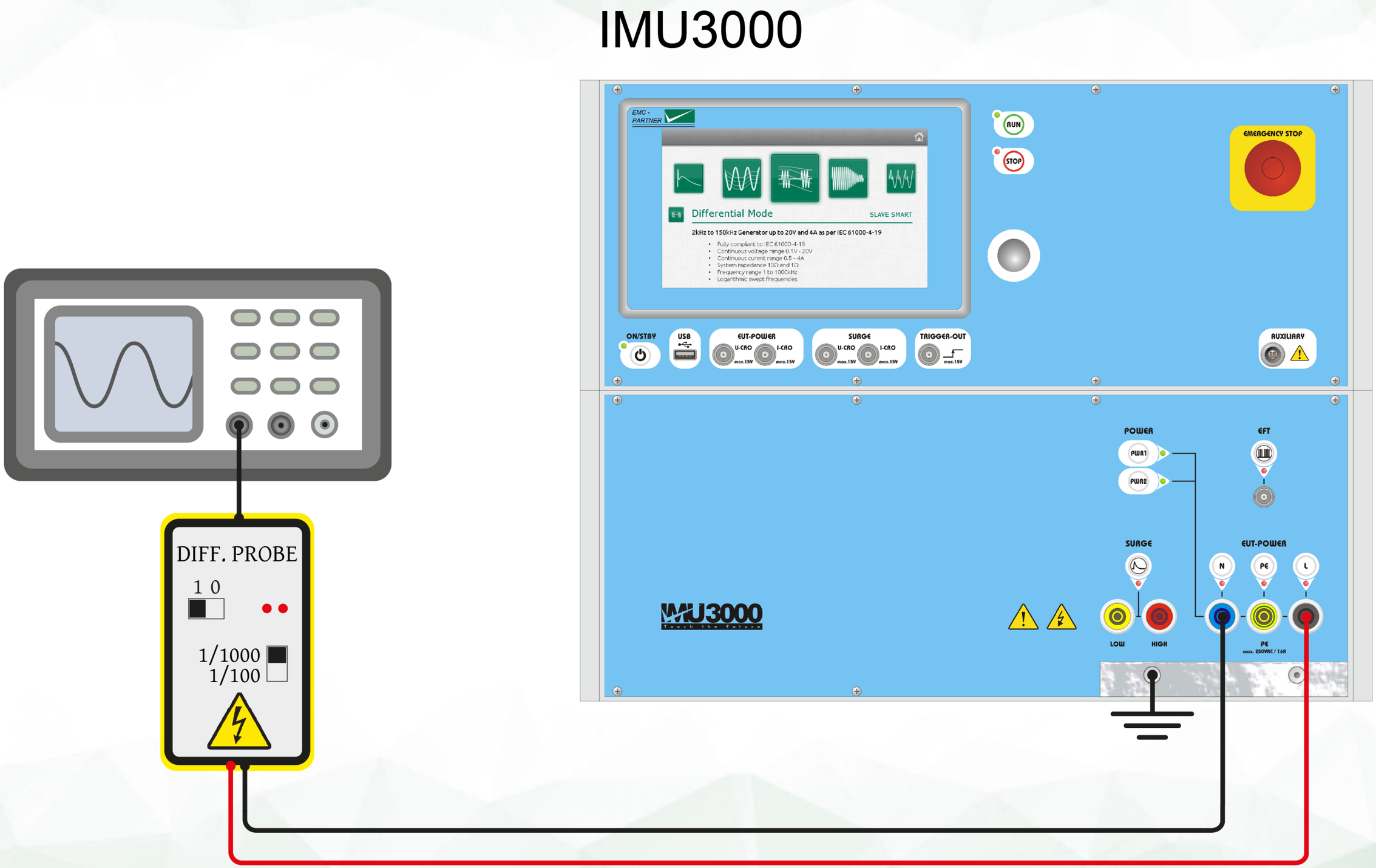

All coupling paths are calibrated successively.

1.8.4. RWG: IMU3000 R/R6, internal CDN, current calibration setup

IMU3000

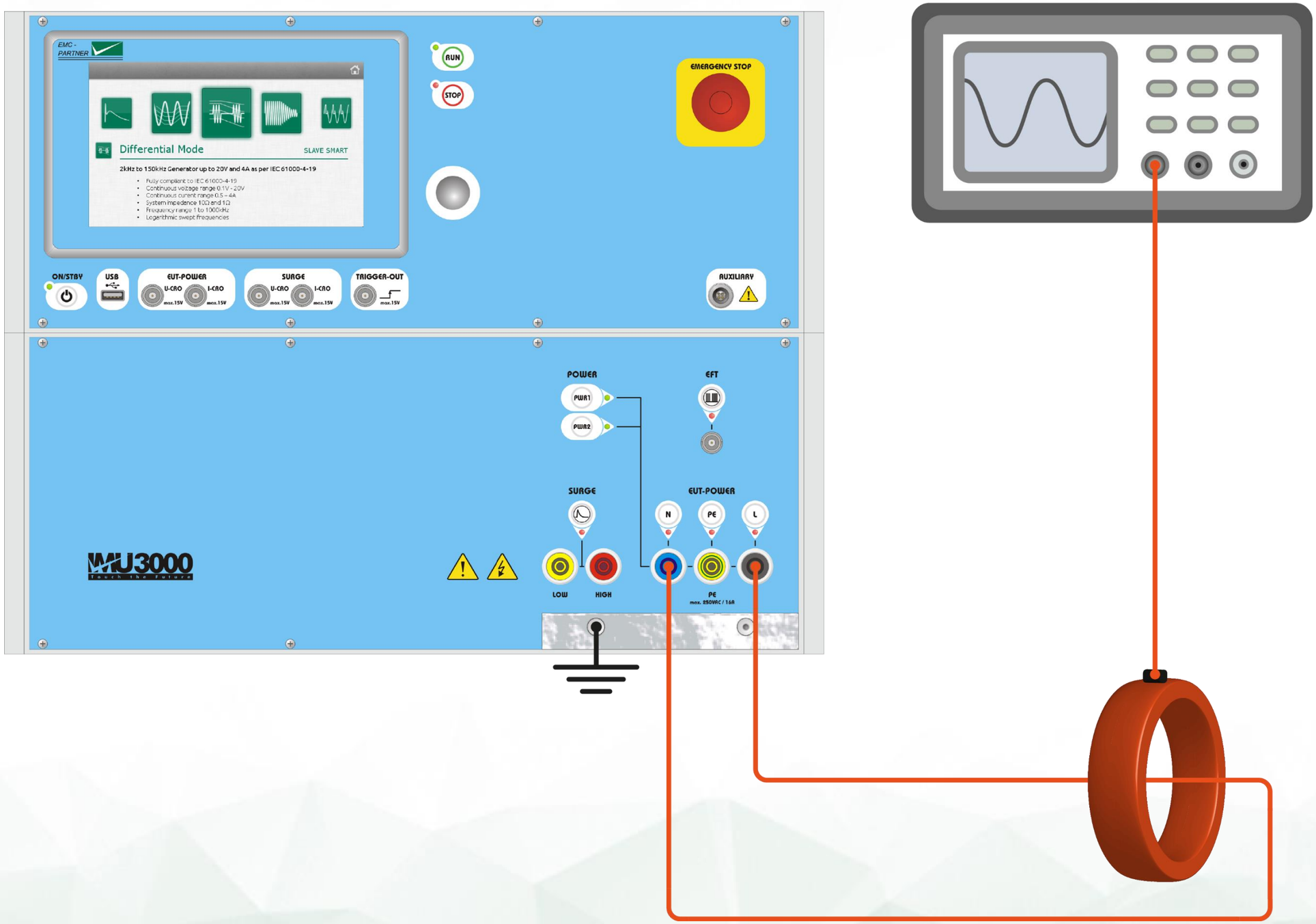

All coupling paths are calibrated successively.

1.8.5. RWG: IMU3000 R/R6, internal CDN, test setup

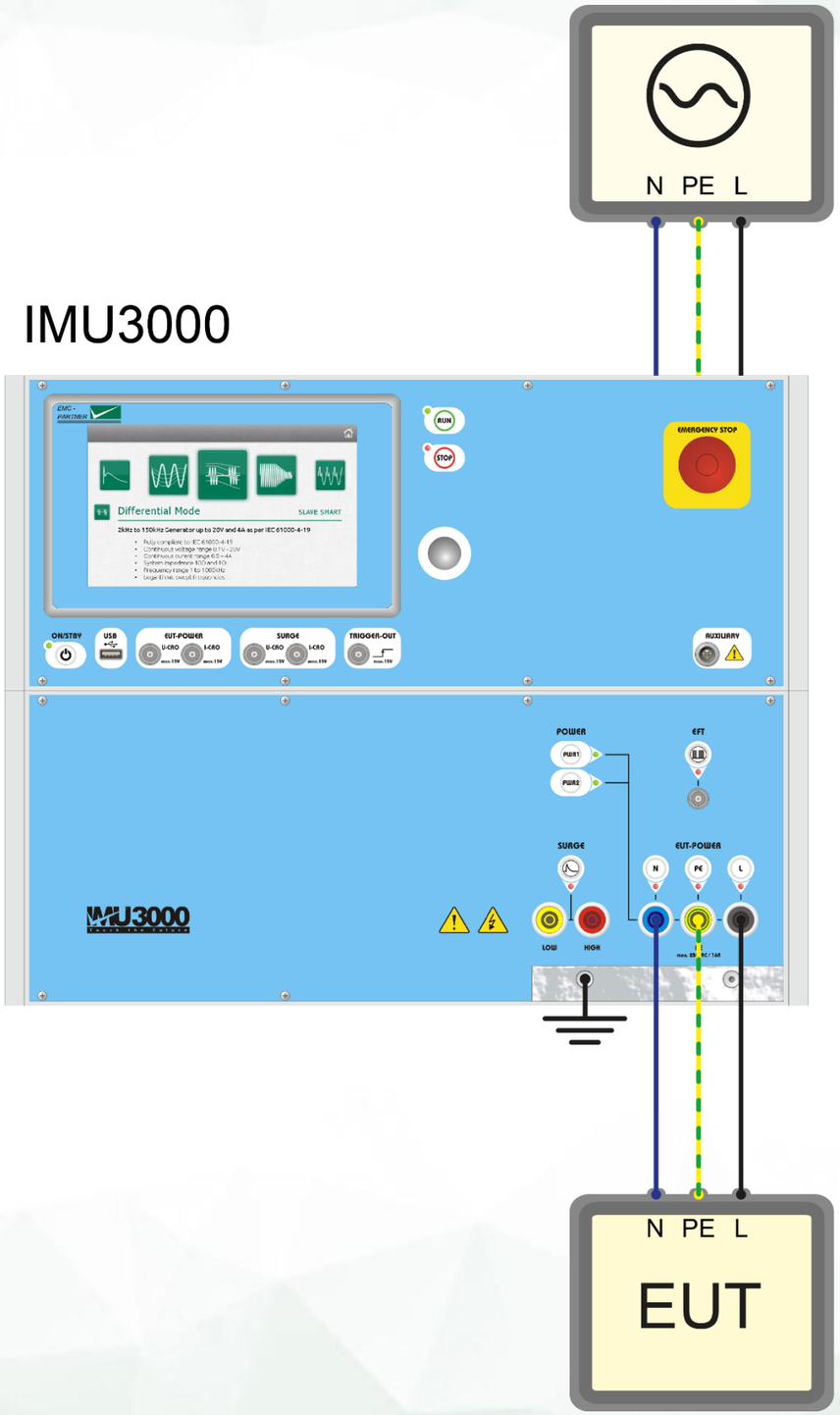

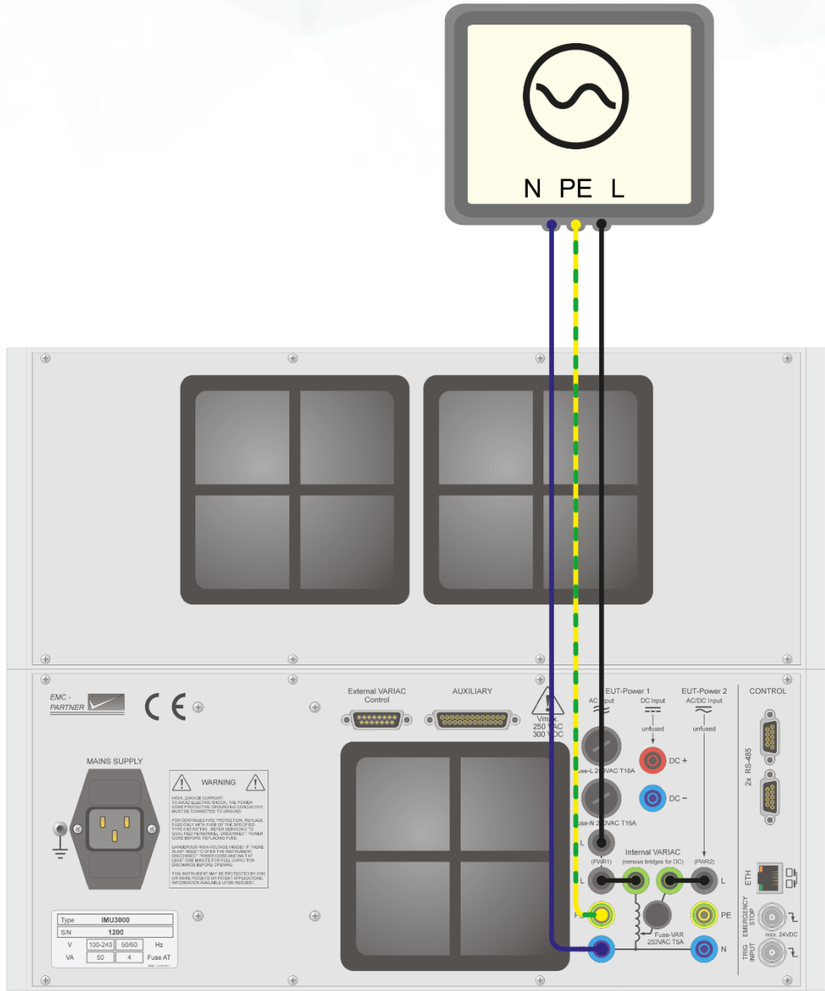

Internal CDN has built-in protection fuses on both L and N lines (16A), and Peak Check function can be used additionally.

1.8.6. RWG: IMU3000 R/R6, CDN2000-06-25 (or any three phase manual CDN), voltage calibration setup

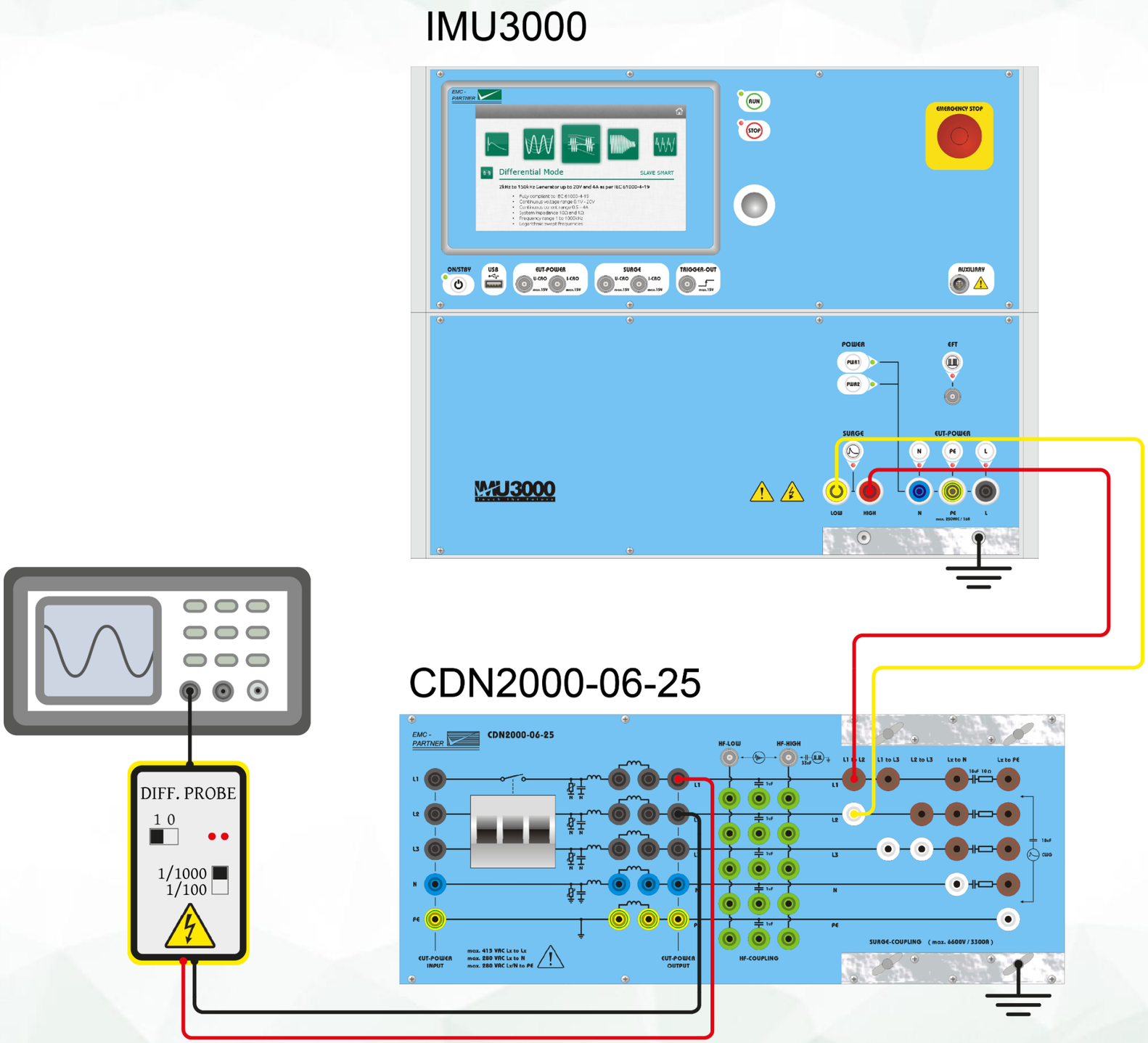

All coupling paths are calibrated successively.

1.8.7. RWG: IMU3000 R/R6, CDN2000-06-25 (or any three phase manual CDN), current calibration setup

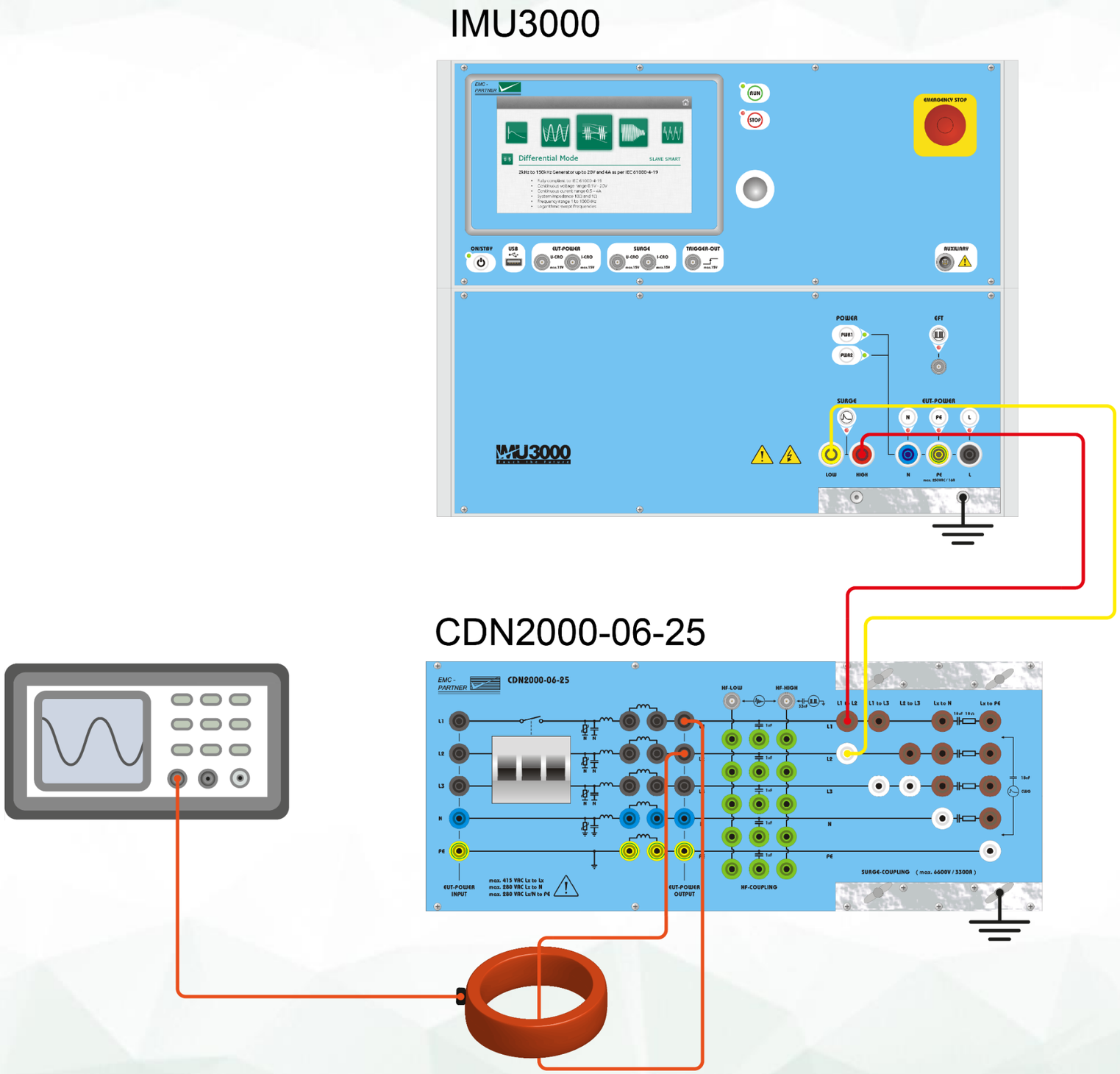

All coupling paths are calibrated successively.

1.8.8. RWG: IMU3000 R/R6, CDN2000-06-25 (or any three phase manual CDN), test setup

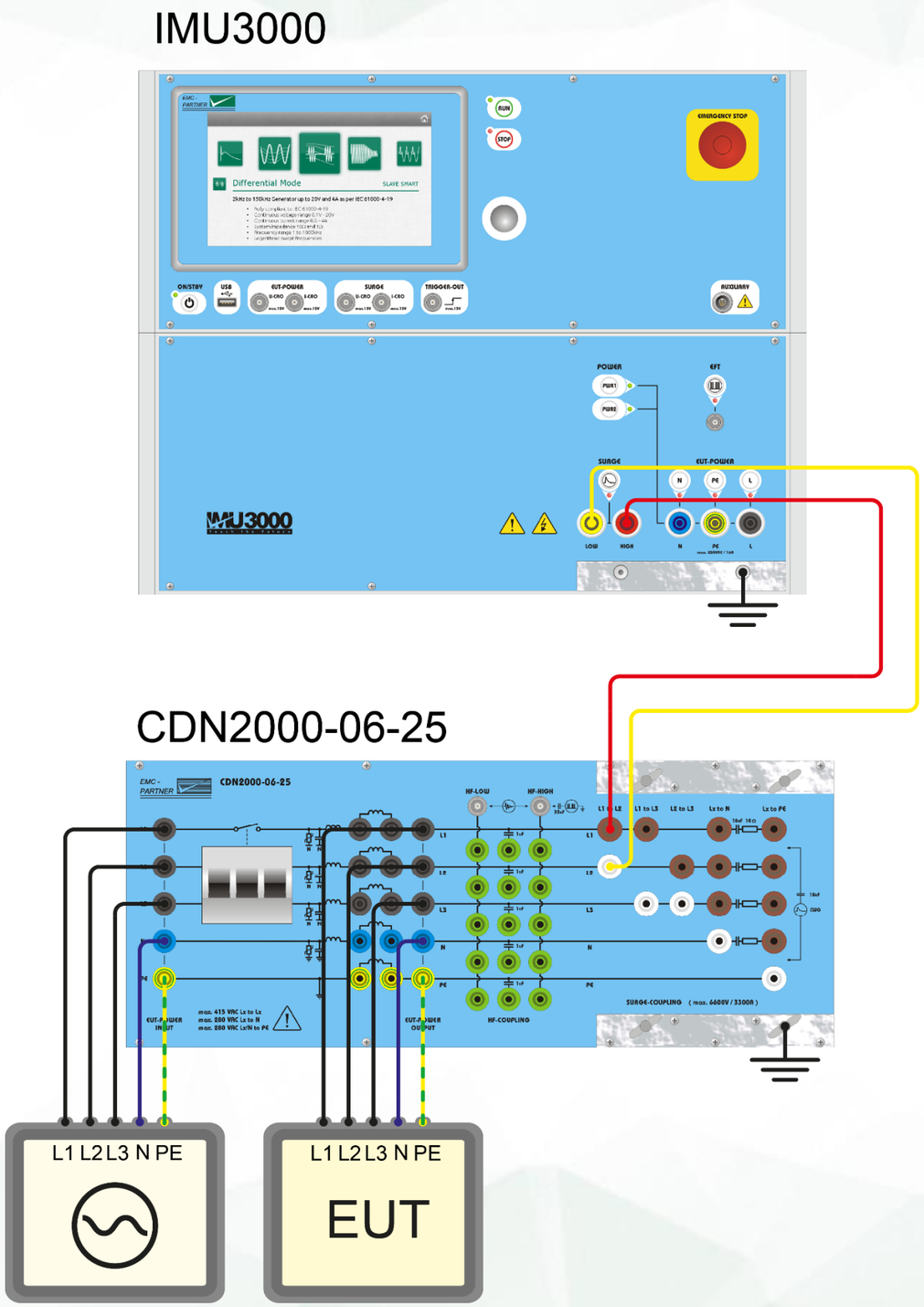

All EMC Partner external CDNs for supply lines have built-in automatic fuses.

1.8.9. RWG: IMU3000 R/R6, CDN3000A-06-32 (any version of CDN3000A), voltage calibration setup

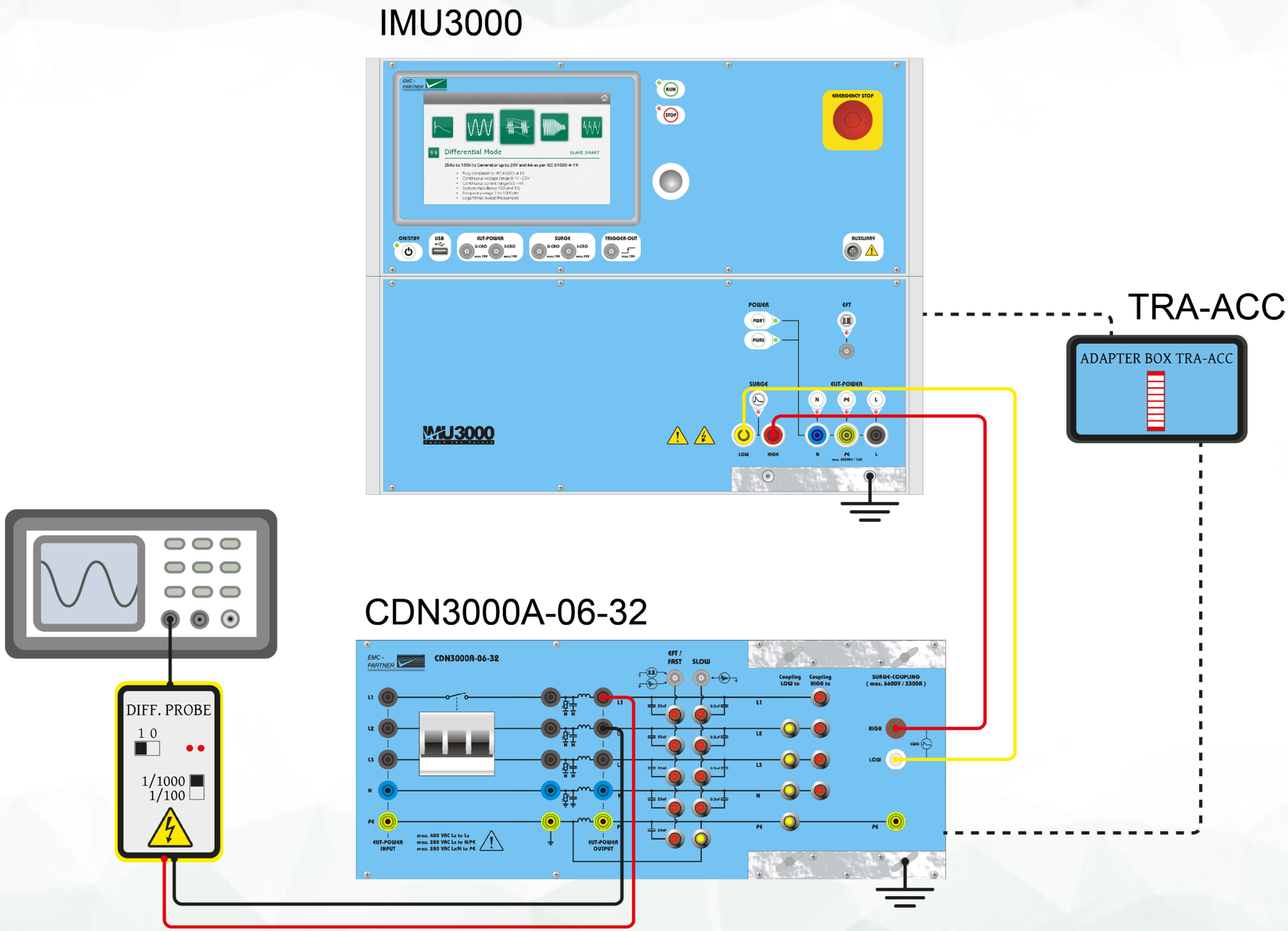

All coupling paths are calibrated successively.

1.8.10. RWG: IMU3000 R/R6, CDN3000A-06-32 (any version of CDN3000A), current calibration setup

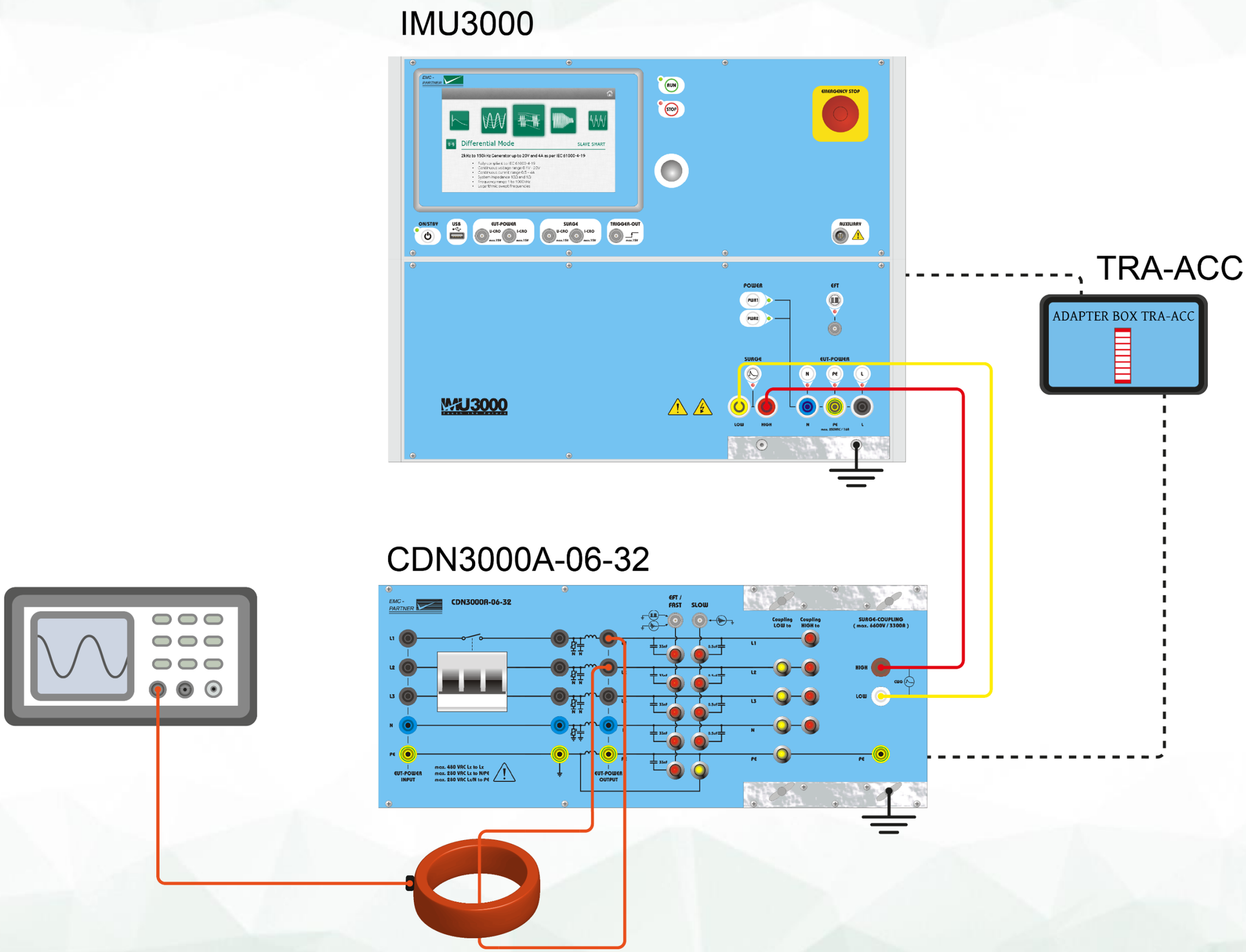

All coupling paths are calibrated successively.

1.8.11. RWG: IMU3000 R/R6, CDN3000A-06-32 (any version of CDN3000A), test setup

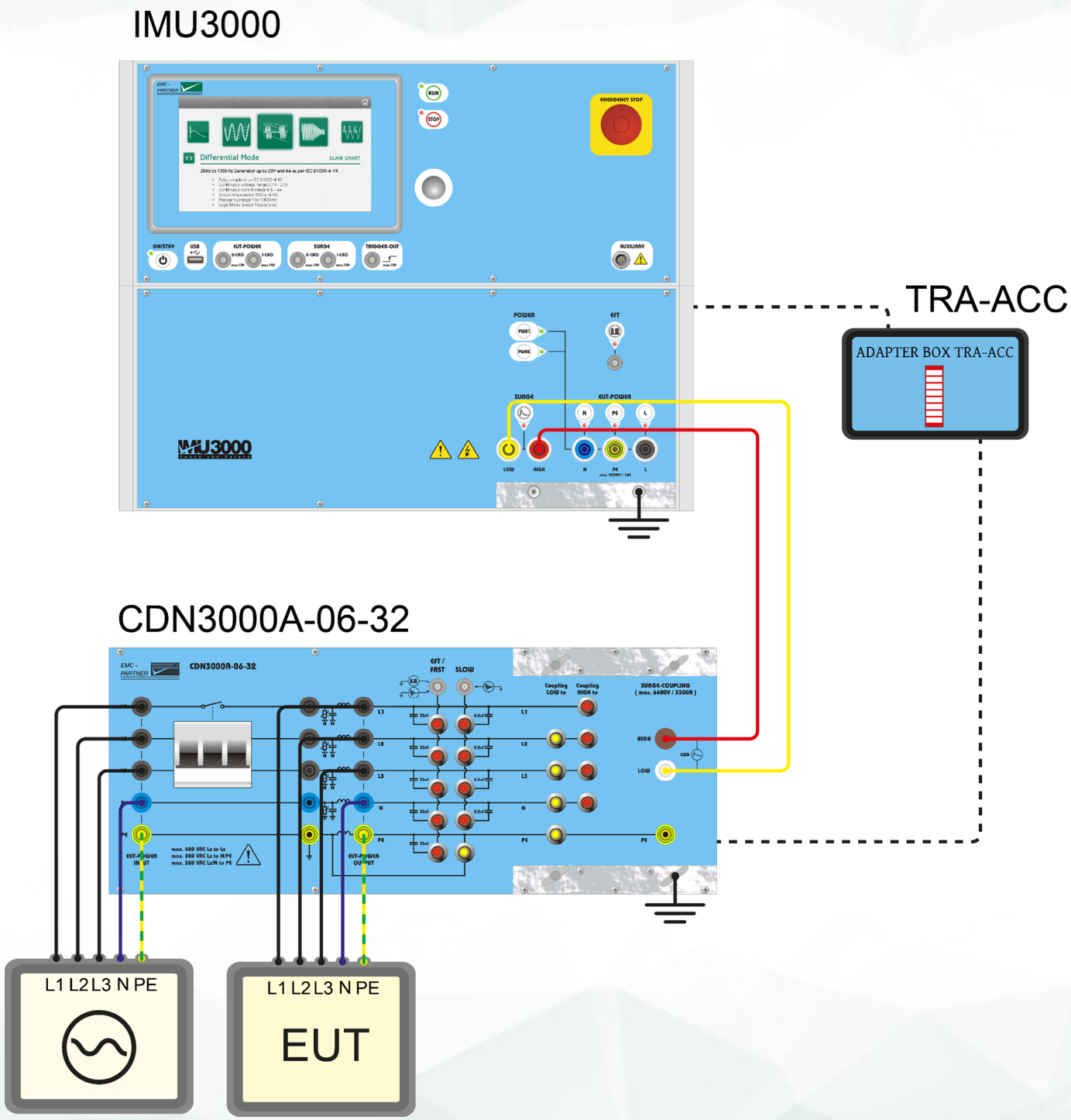

All EMC Partner external CDNs for supply lines have built-in automatic fuses.

1.8.12. RWG: IMU3000 R/R6, CDN-DATA-4L, voltage calibration setup

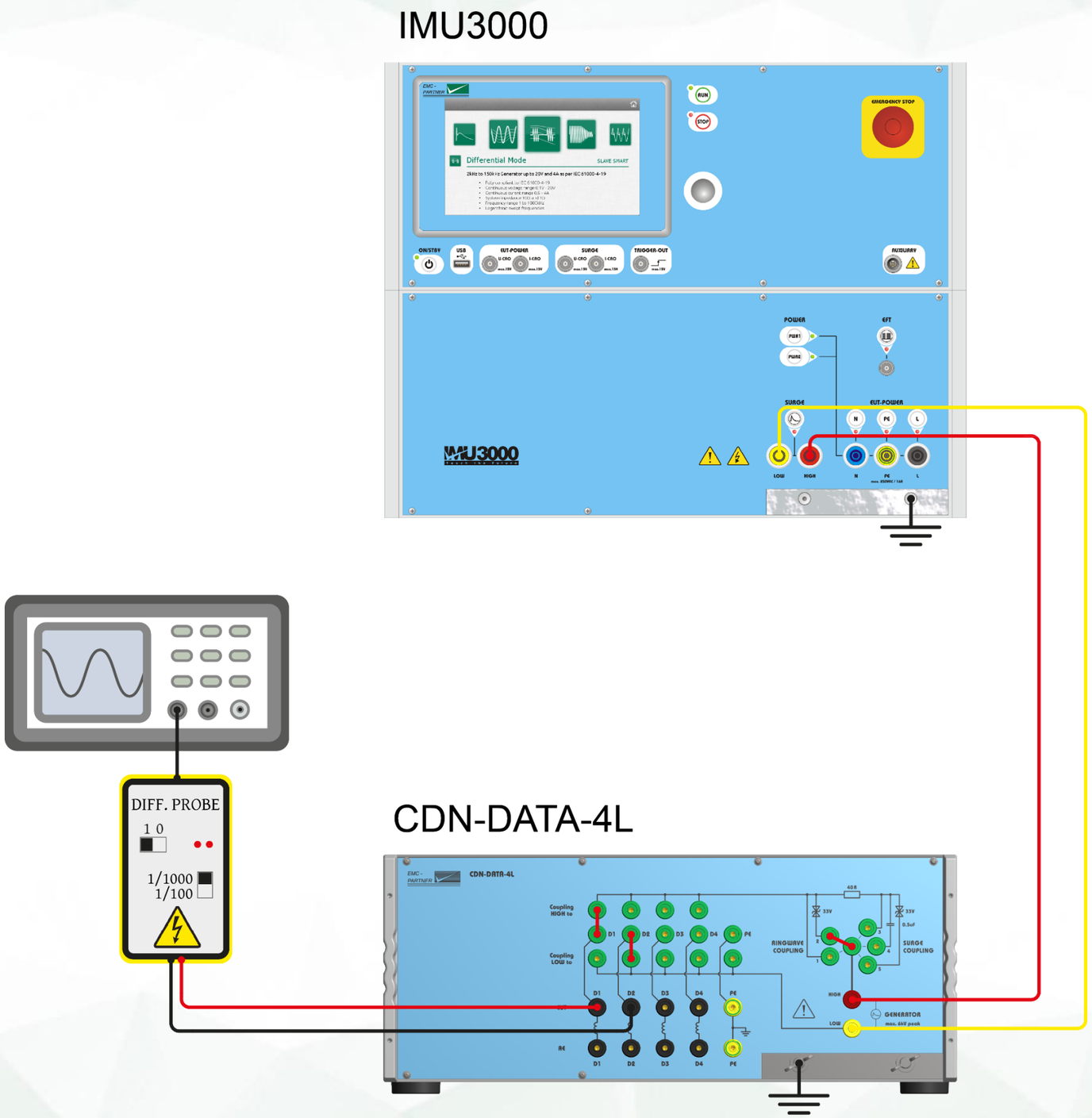

All coupling paths are calibrated successively, L-L, L-Gnd.

1.8.13. RWG: IMU3000 R/R6, CDN-DATA-4L, current calibration setup

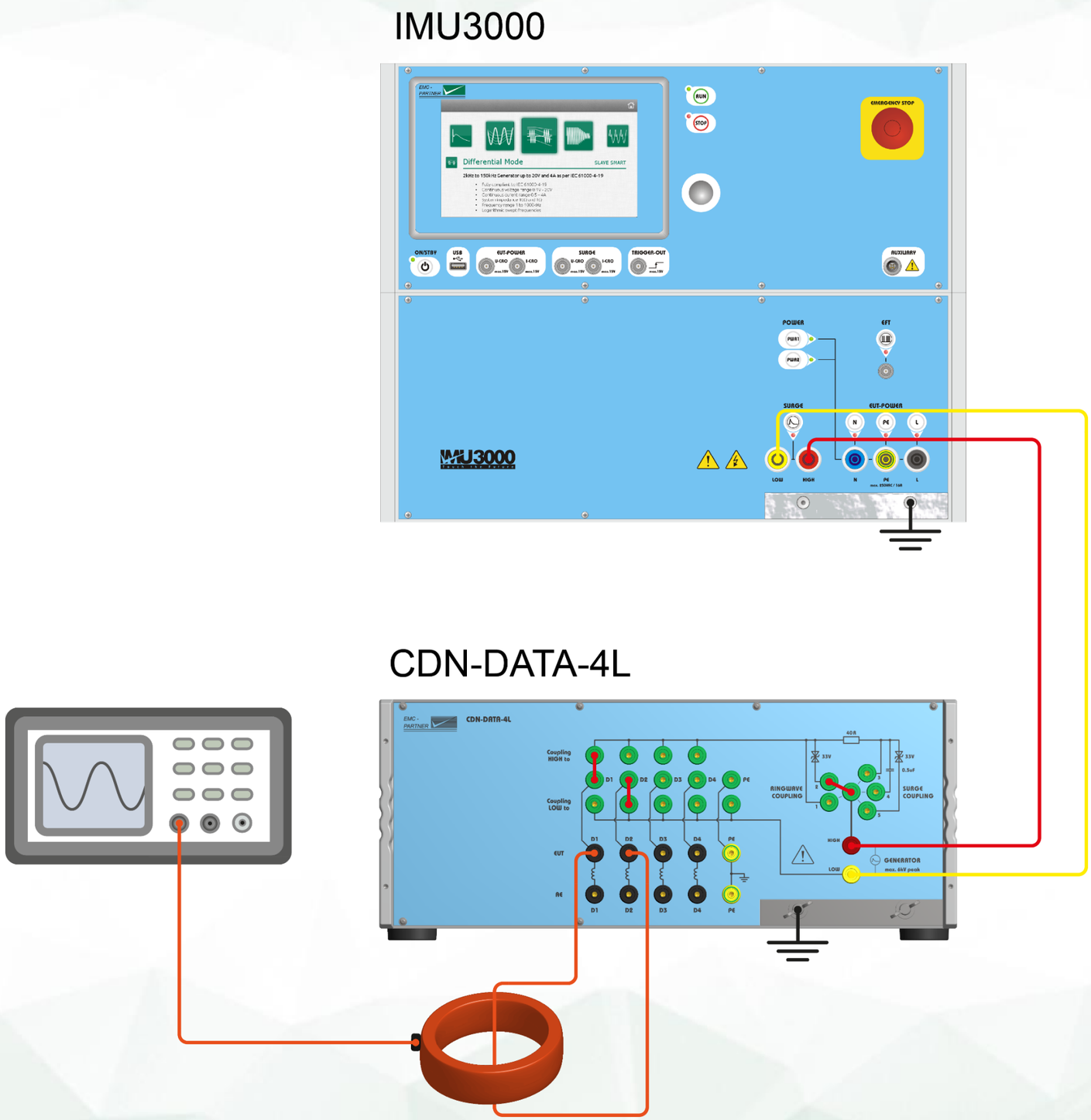

All coupling paths are calibrated successively, L-L, L-Gnd.

1.8.14. RWG: IMU3000 R/R6, CDN-DATA-4L, test setup

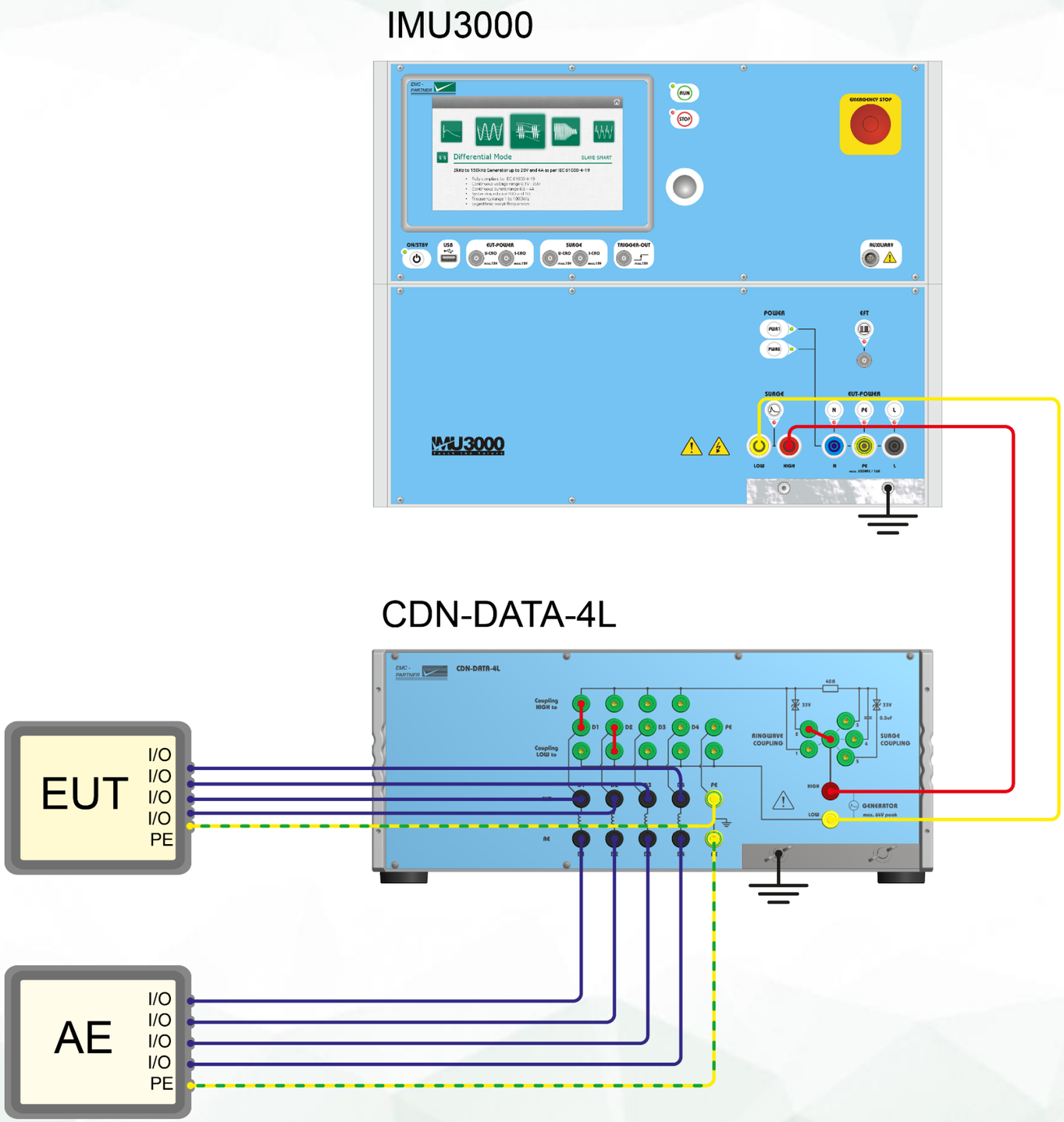

After EUT and AE connections are performed, couplings are selected successively. Ring wave coupling path is different from surge coupling path.

1.8.15. RWG: IMU3000 R/R6, CDN-DATA-8L, voltage calibration setup

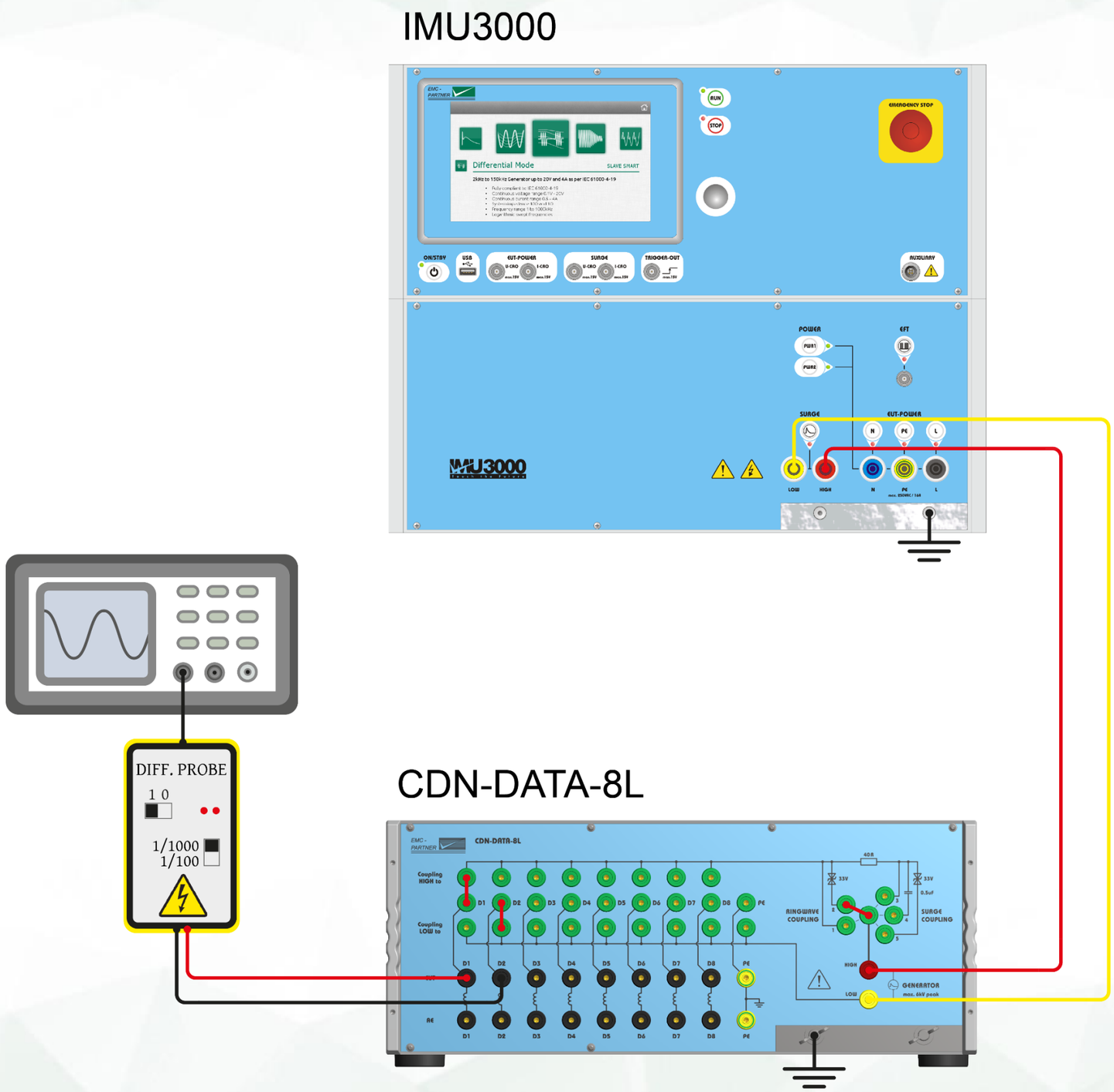

All coupling paths are calibrated successively, L-L, L-Gnd.

1.8.16. RWG: IMU3000 R/R6, CDN-DATA-8L, current calibration setup

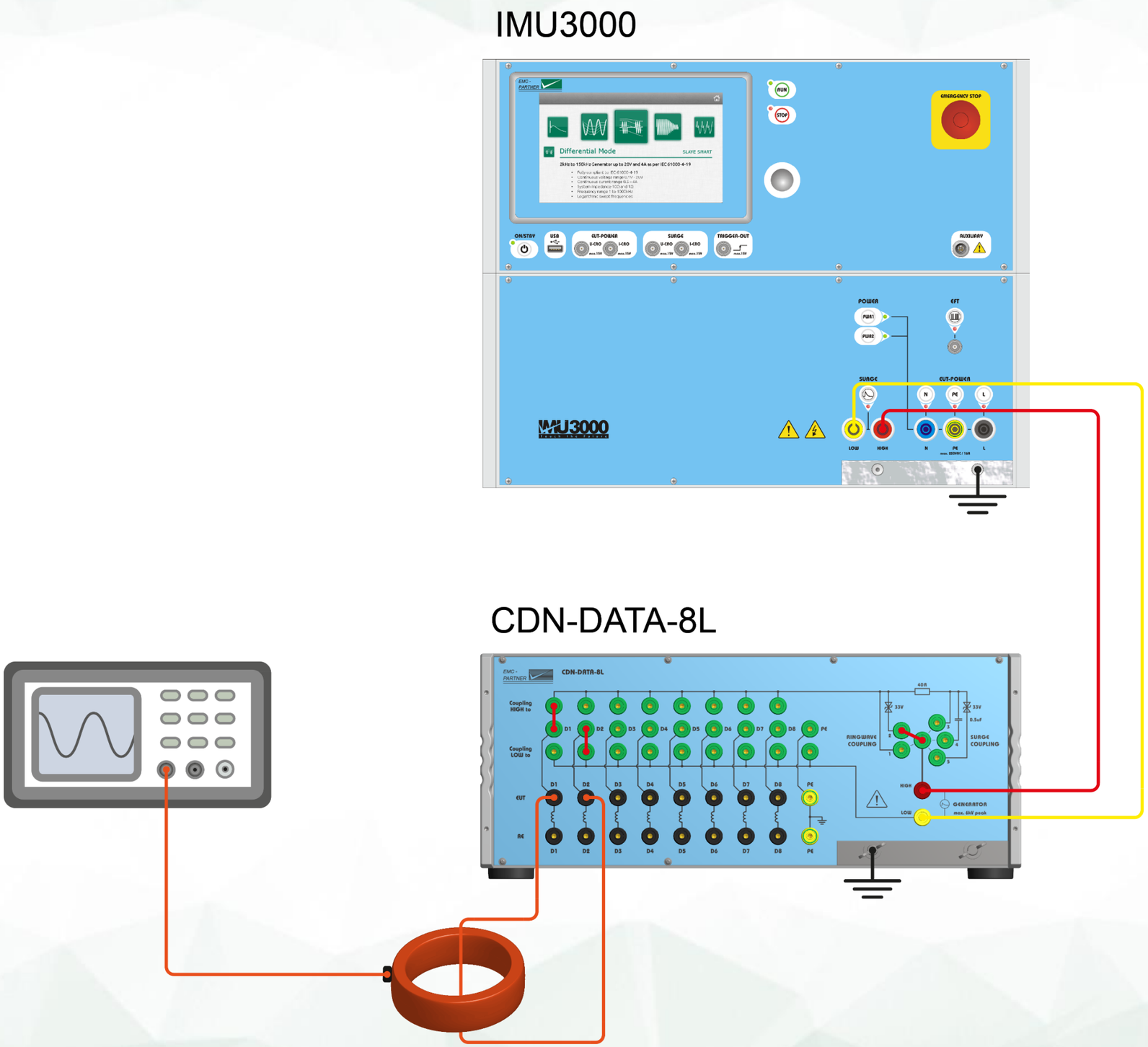

All coupling paths are calibrated successively, L-L, L-Gnd.

1.8.17. RWG: IMU3000 R/R6, CDN-DATA-8L, test setup

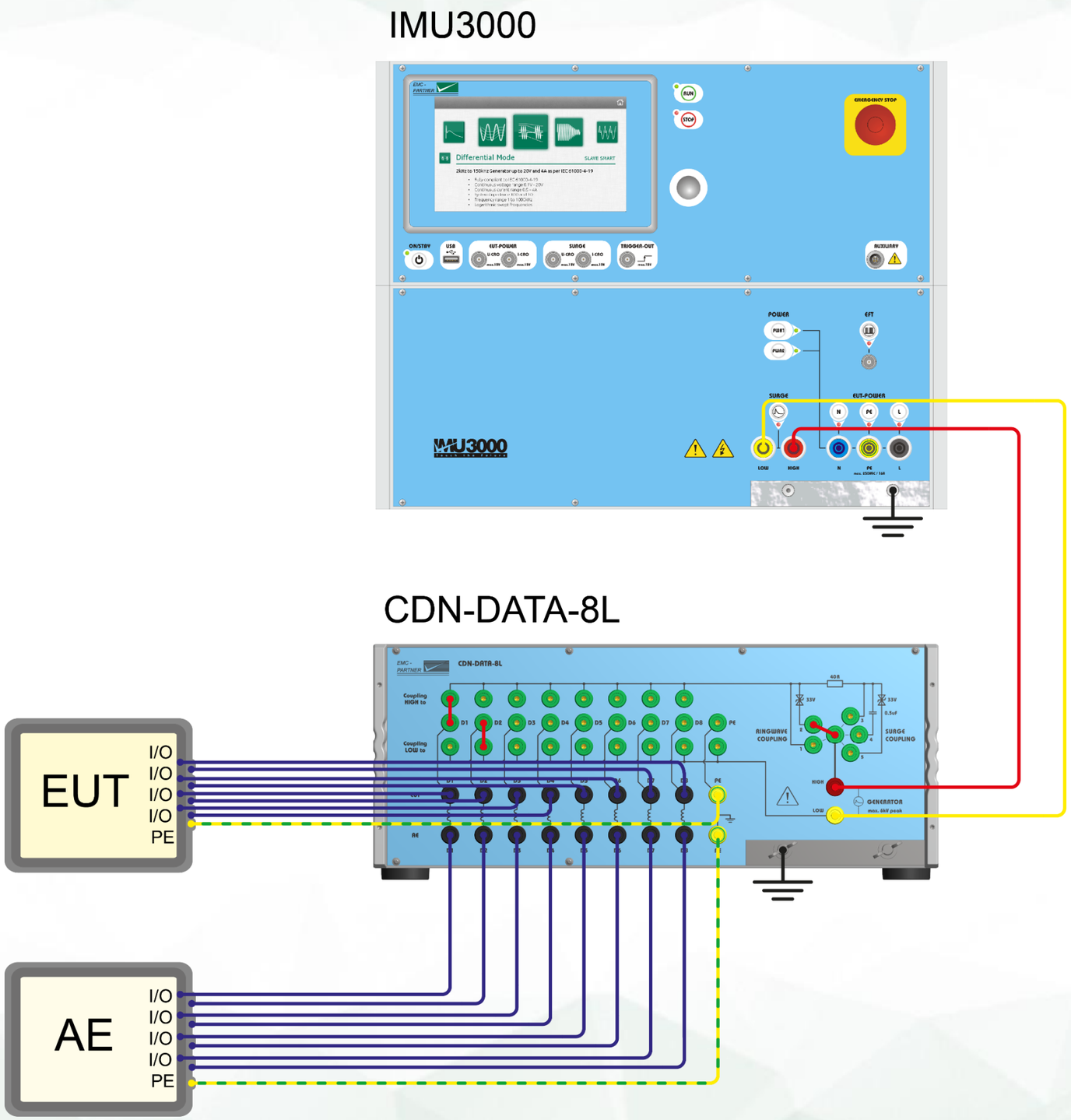

After EUT and AE connections are performed, couplings are selected successively. Ring wave coupling path is different from surge coupling path.

IEC 61000-4-16
Edition 1.1 +AMD1 / 2002

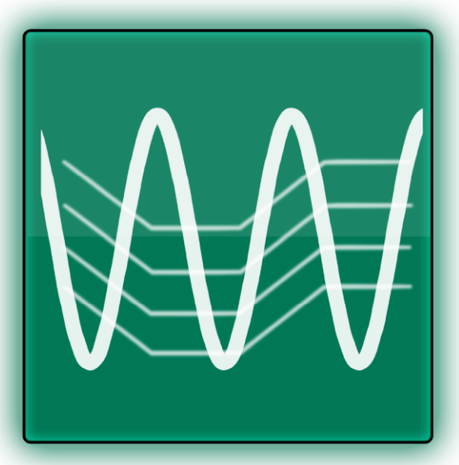

Common mode disturbances

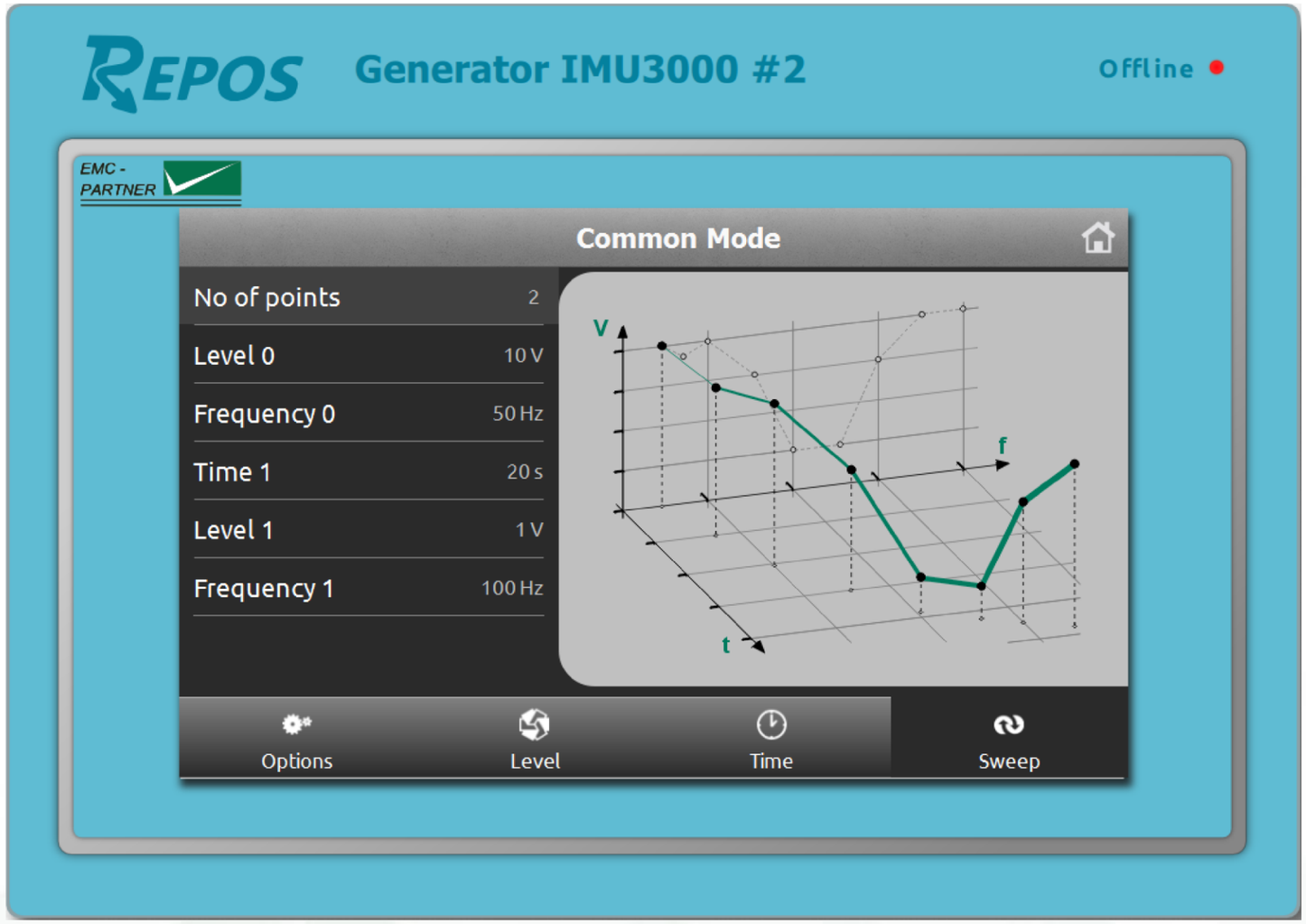

1.9.1. Common mode: IMU3000 C, voltage calibration setup up to 30V

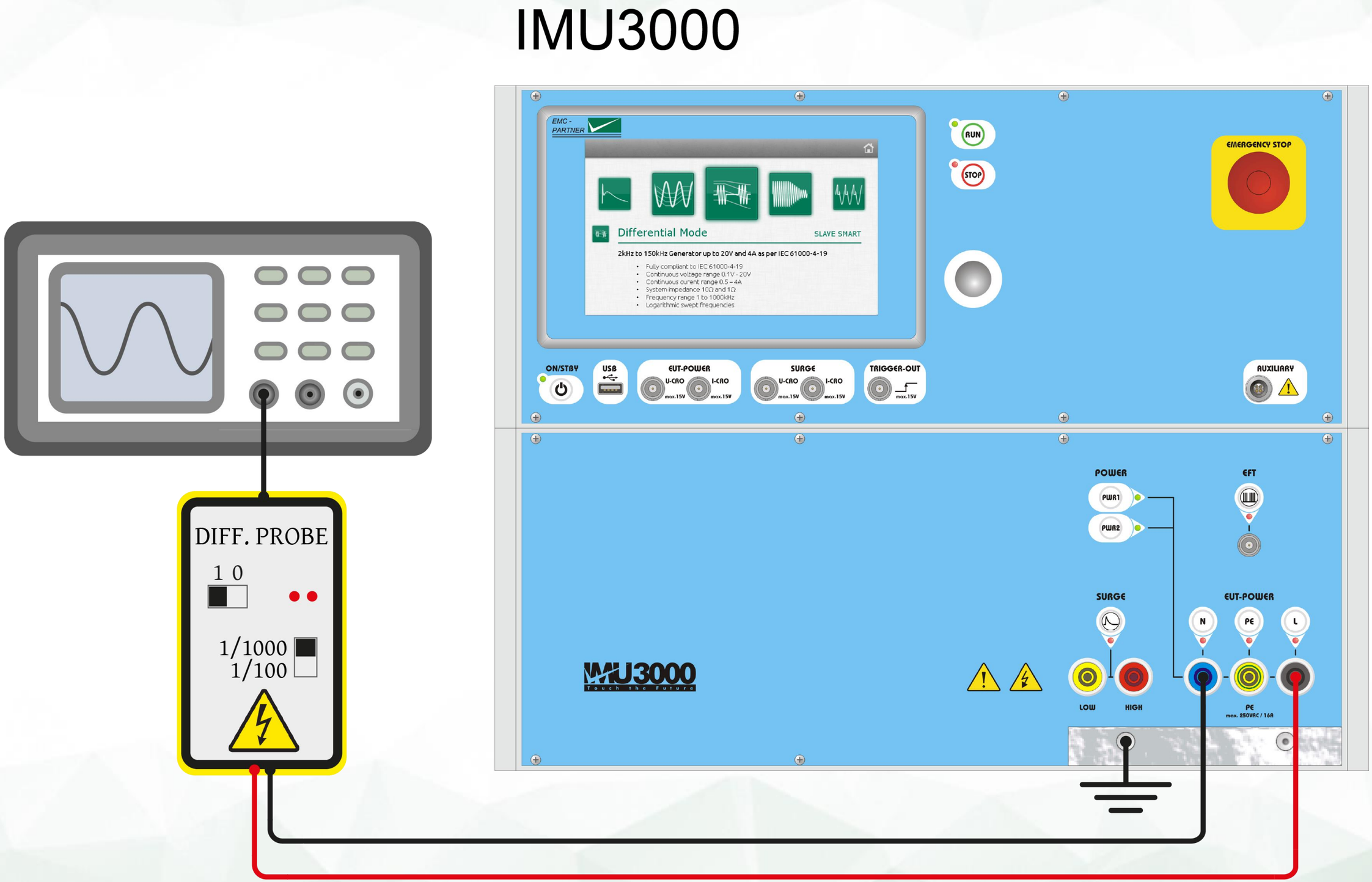

Calibration is performed at output of the generator, CDN is not part of the calibration setup.

1.9.2. Common mode: IMU3000 C, current (impedance) calibration setup up to 30V

IMU3000

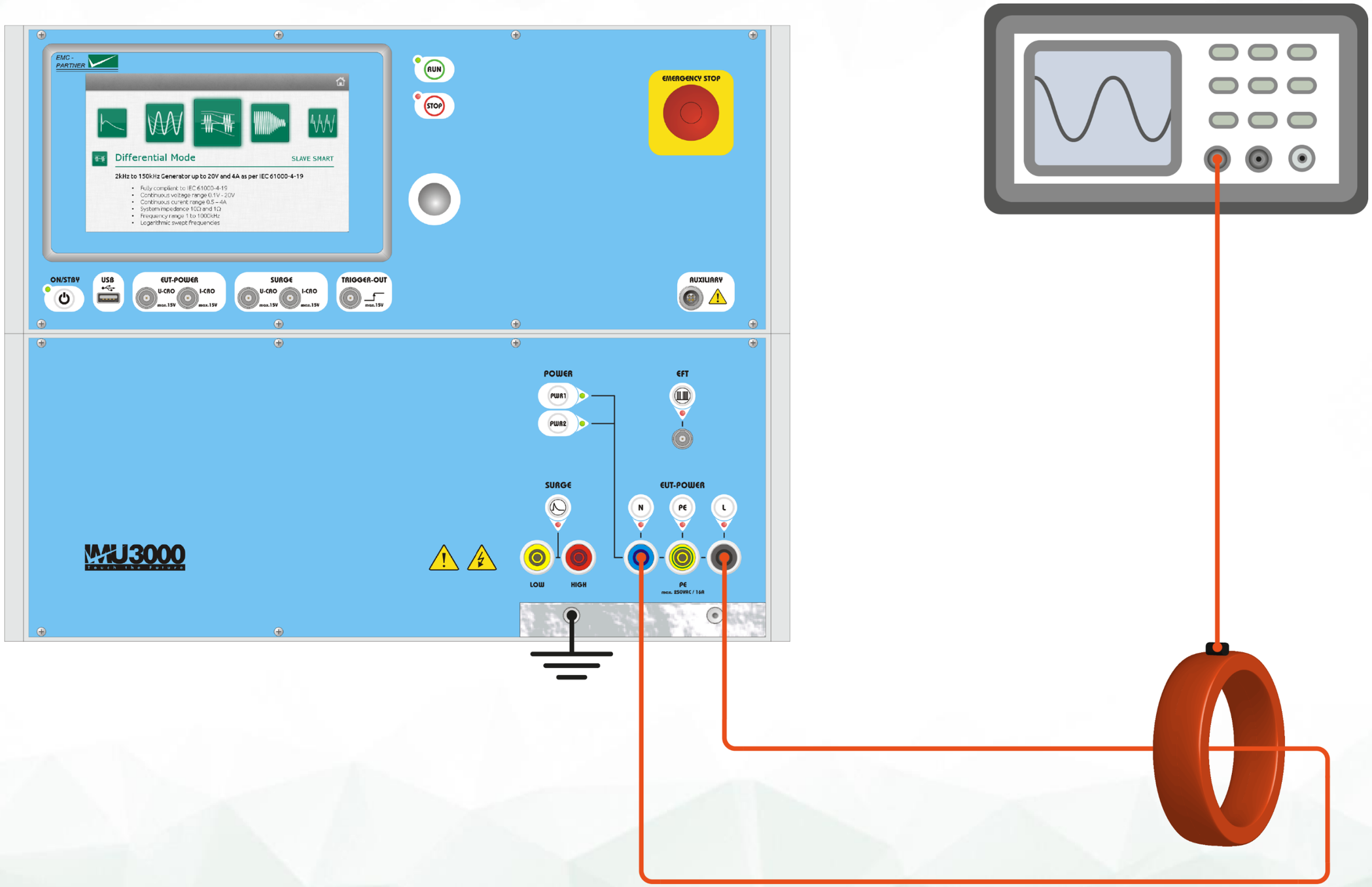

Short circuit current can be measured in order to check output impedance.

1.9.3. Common mode: IMU3000 C, CN16, test setup up to 30V

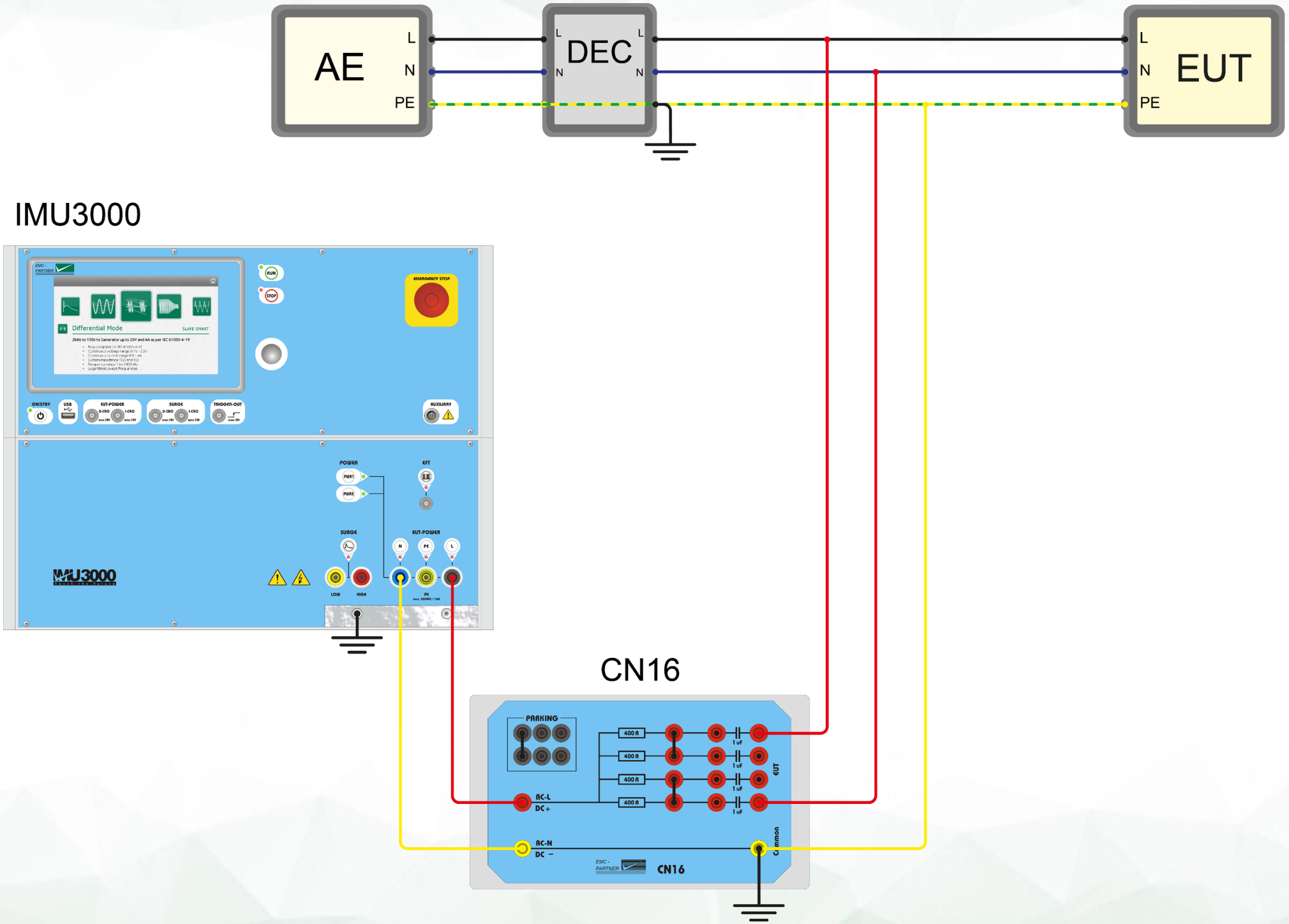

Decoupler could be DN16-1P6, DN16-1P16 or another suitable device calibrated according to standard. Coupling on 4 lines also possible.

1.9.4. Common mode: IMU3000 C, CN16, DN16-1P16 (or DN16-1P6), test setup up to 30V

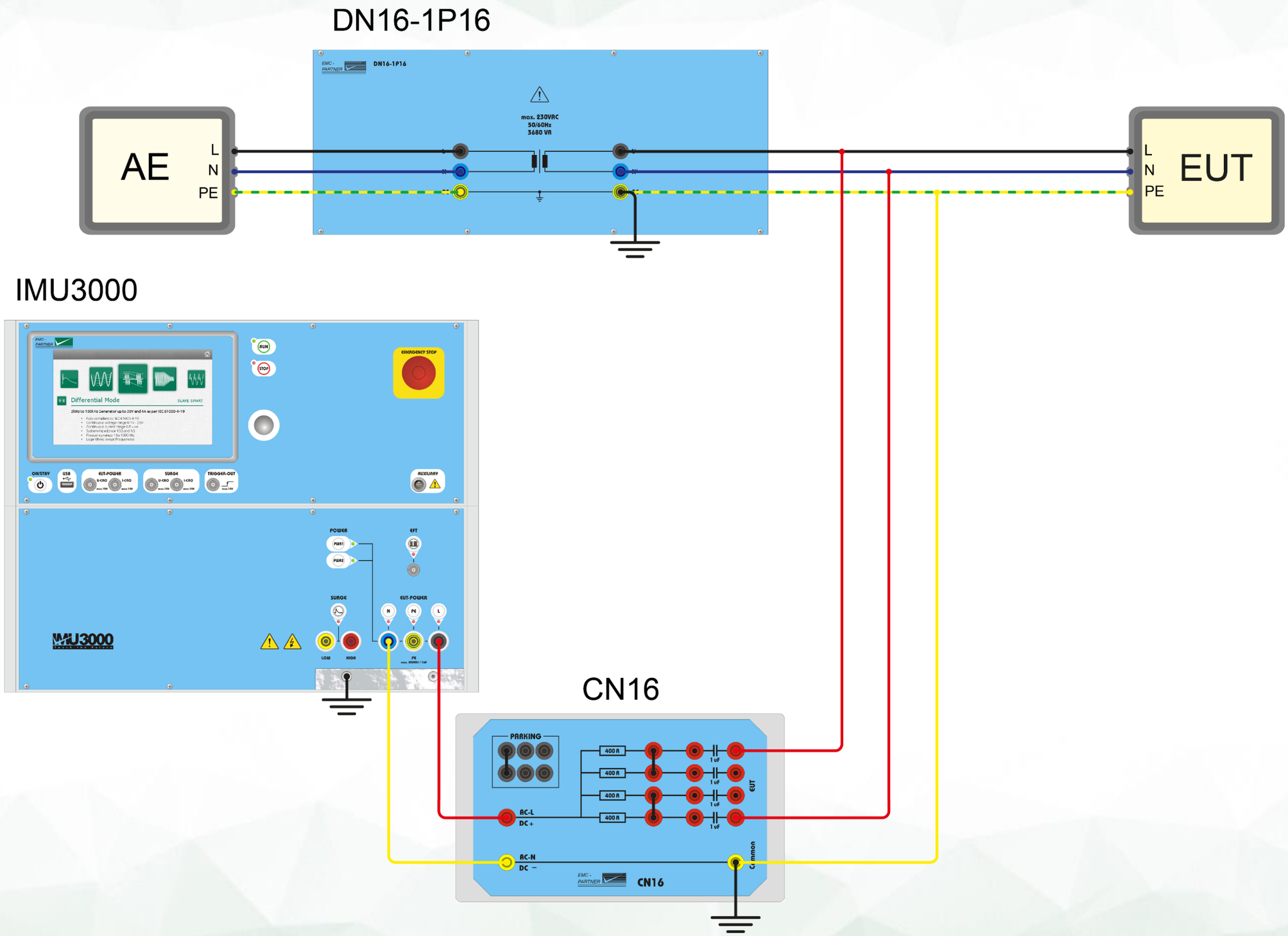

DN16-1P6 and DN16-1P16: common mode decoupling > 60 dB, insulation > 1 kV.

1.9.5. Common mode: IMU3000 C, CN16T, test setup up to 30V

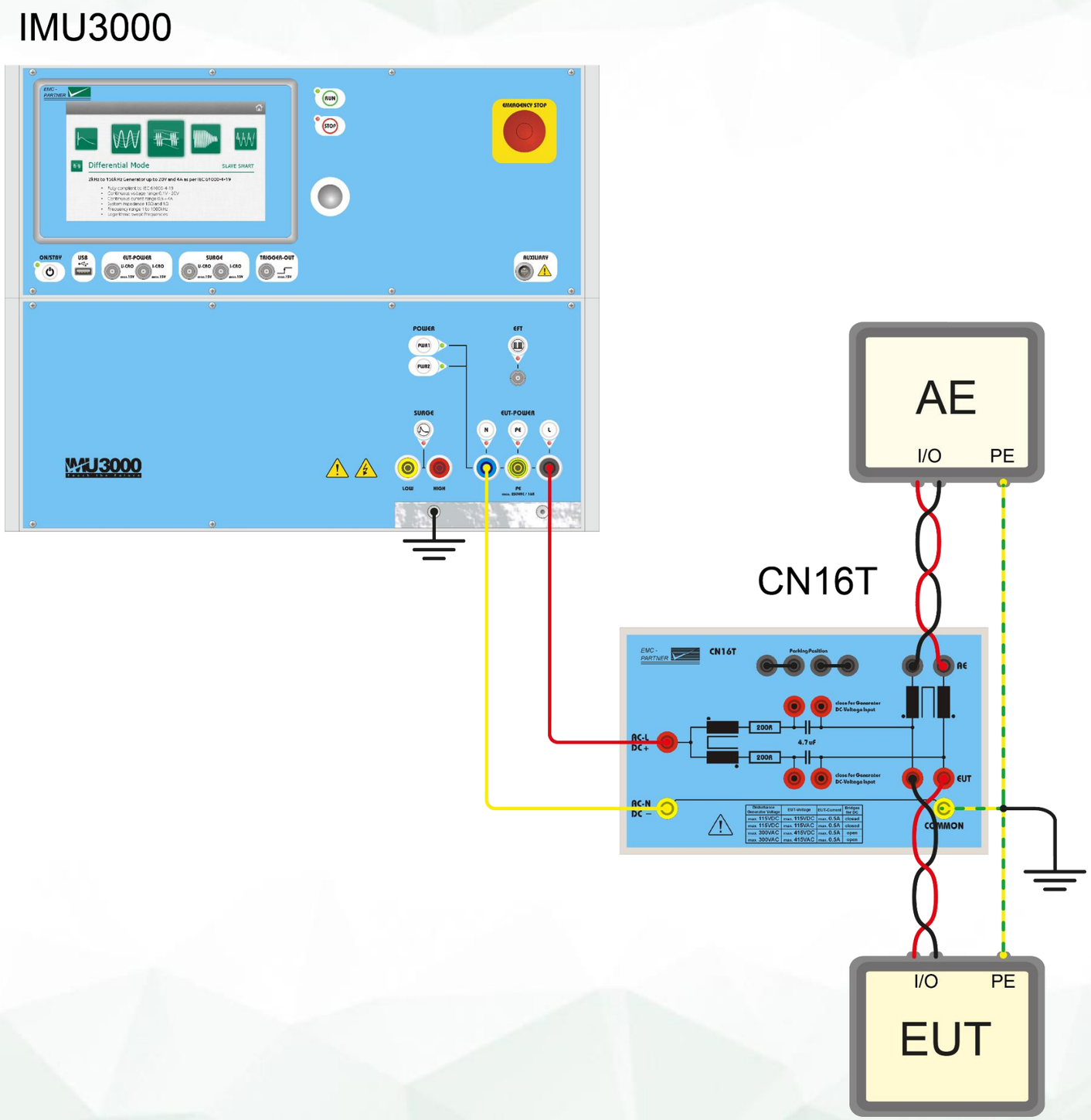

Capacitors have to be bypassed when coupling DC test signal.

1.9.6. Common mode: IMU3000 C, EXT-TRA3000 C-SHORT, PS3, voltage calibration setup up to 300V

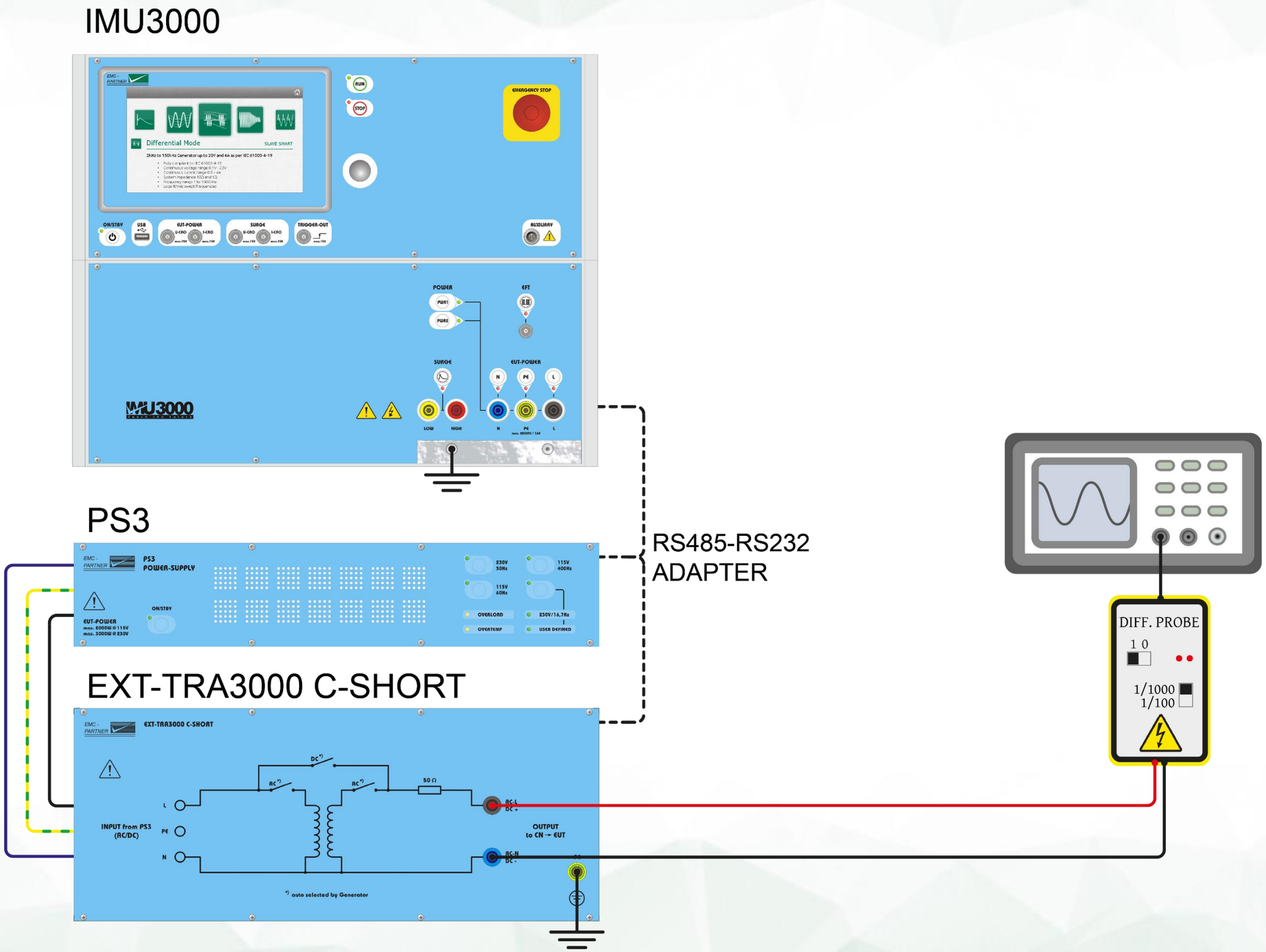

Calibration is performed at output of the generator, CDN is not part of the calibration setup.

1.9.7. Common mode: IMU3000 C, EXT-TRA3000 C-SHORT, PS3, current (impedance) calibration setup up to 300V

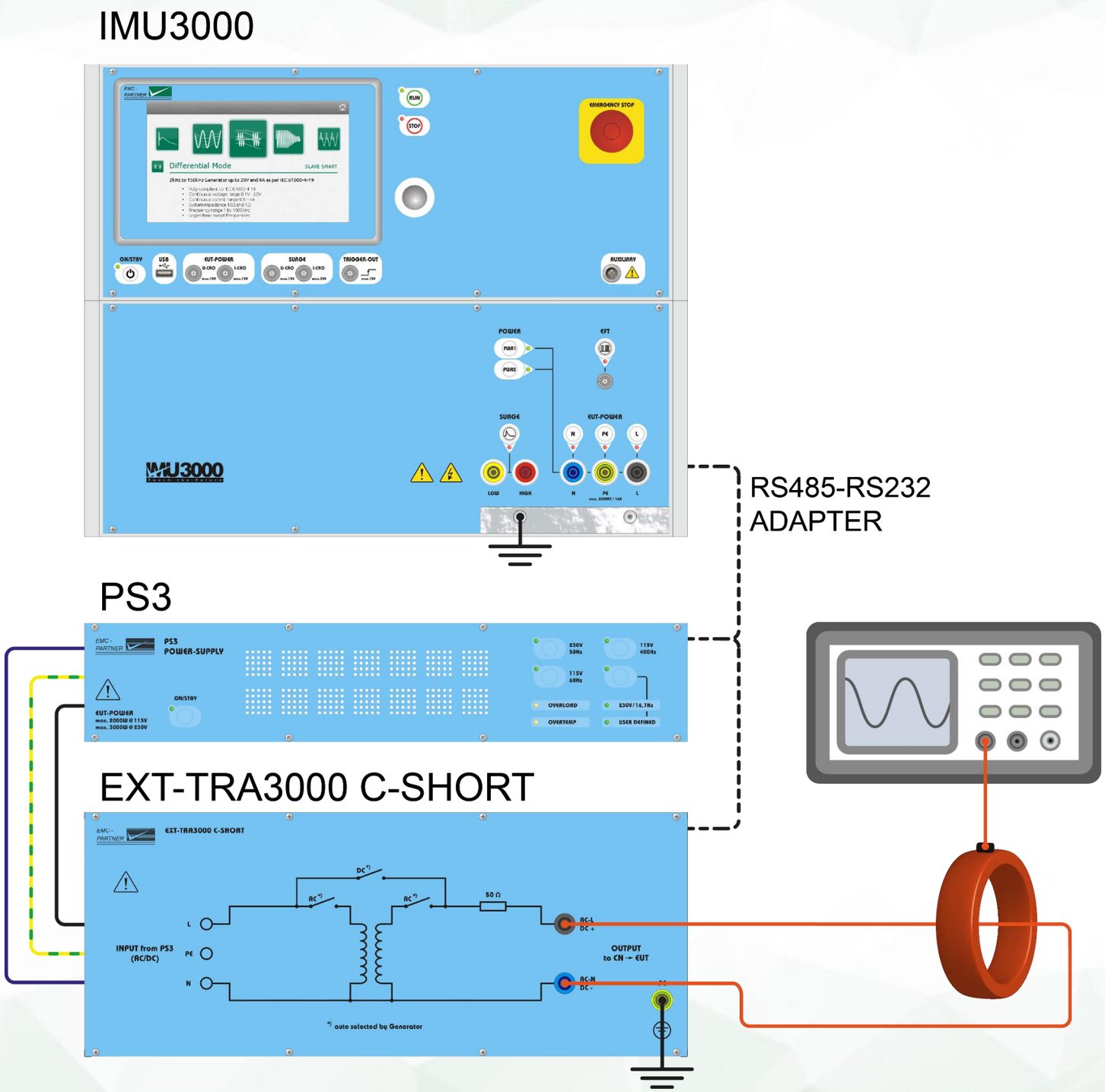

Short circuit current can be measured in order to check output impedance.

1.9.8. Common mode: IMU3000 C, EXT-TRA3000 C-SHORT, PS3, CN16, test setup up to 300V

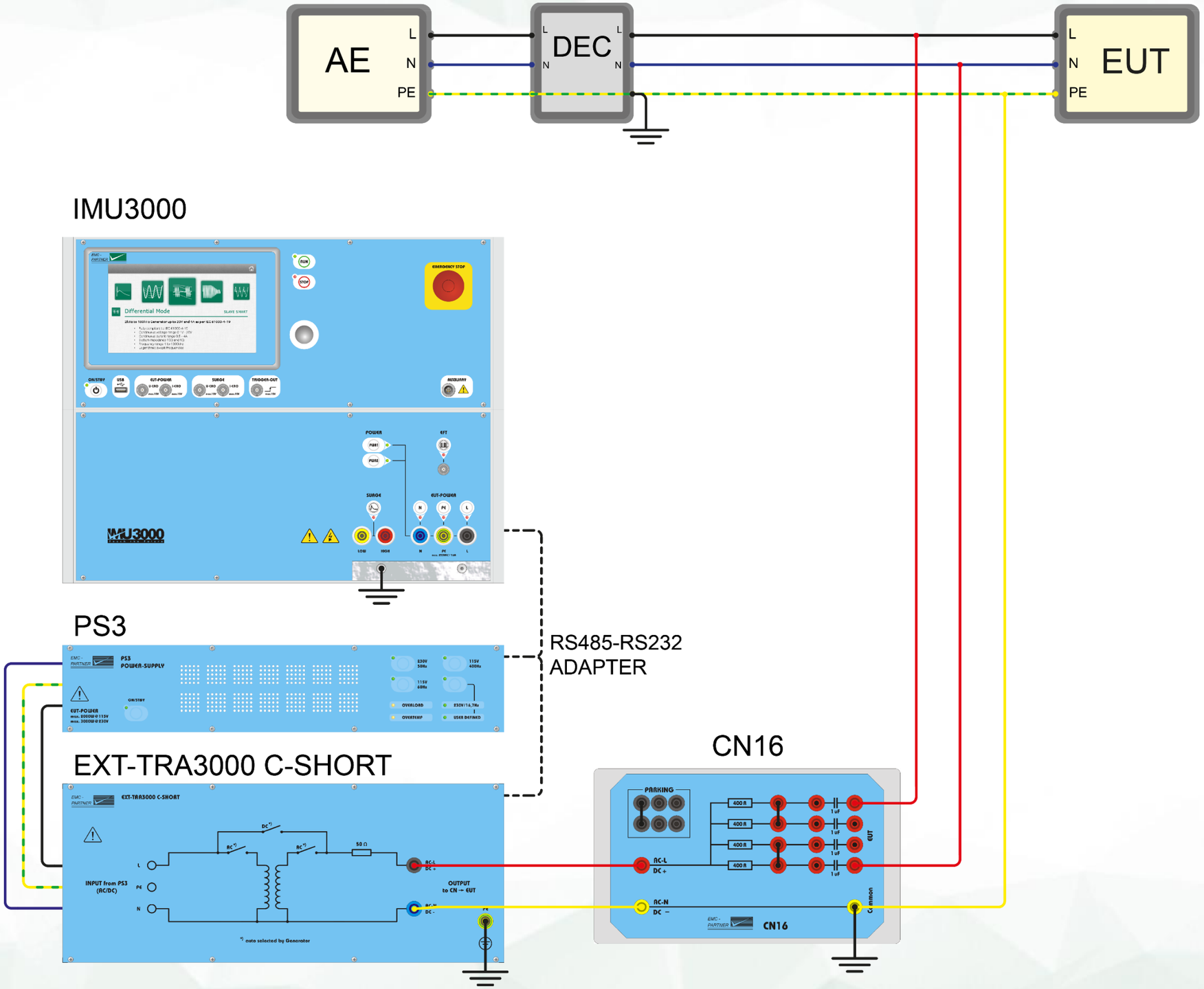

Decoupler could be DN16-1P6, DN16-1P16 or another suitable device calibrated according to standard. Coupling on 4 lines also possible.

1.9.9. Common mode: IMU3000 C, EXT-TRA3000 C-SHORT, PS3, CN16, DN16-1P16 (or DN16-1P6), test setup up to 300V

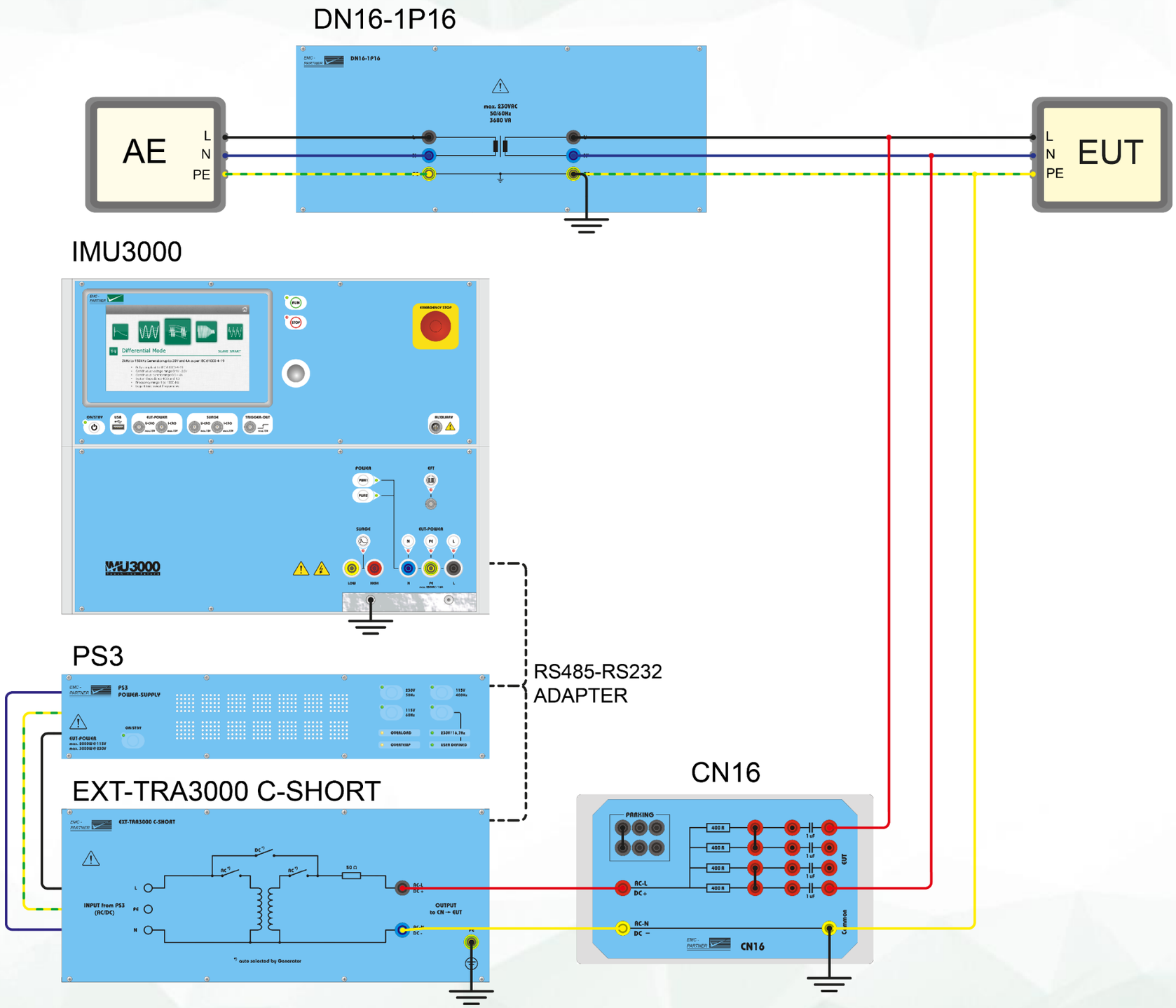

DN16-1P6 and DN16-1P16: common mode decoupling > 60 dB, insulation > 1 kV.

1.9.10. Common mode: IMU3000 C, EXT-TRA3000 C-SHORT, PS3, CN16DC, test setup up to 300V

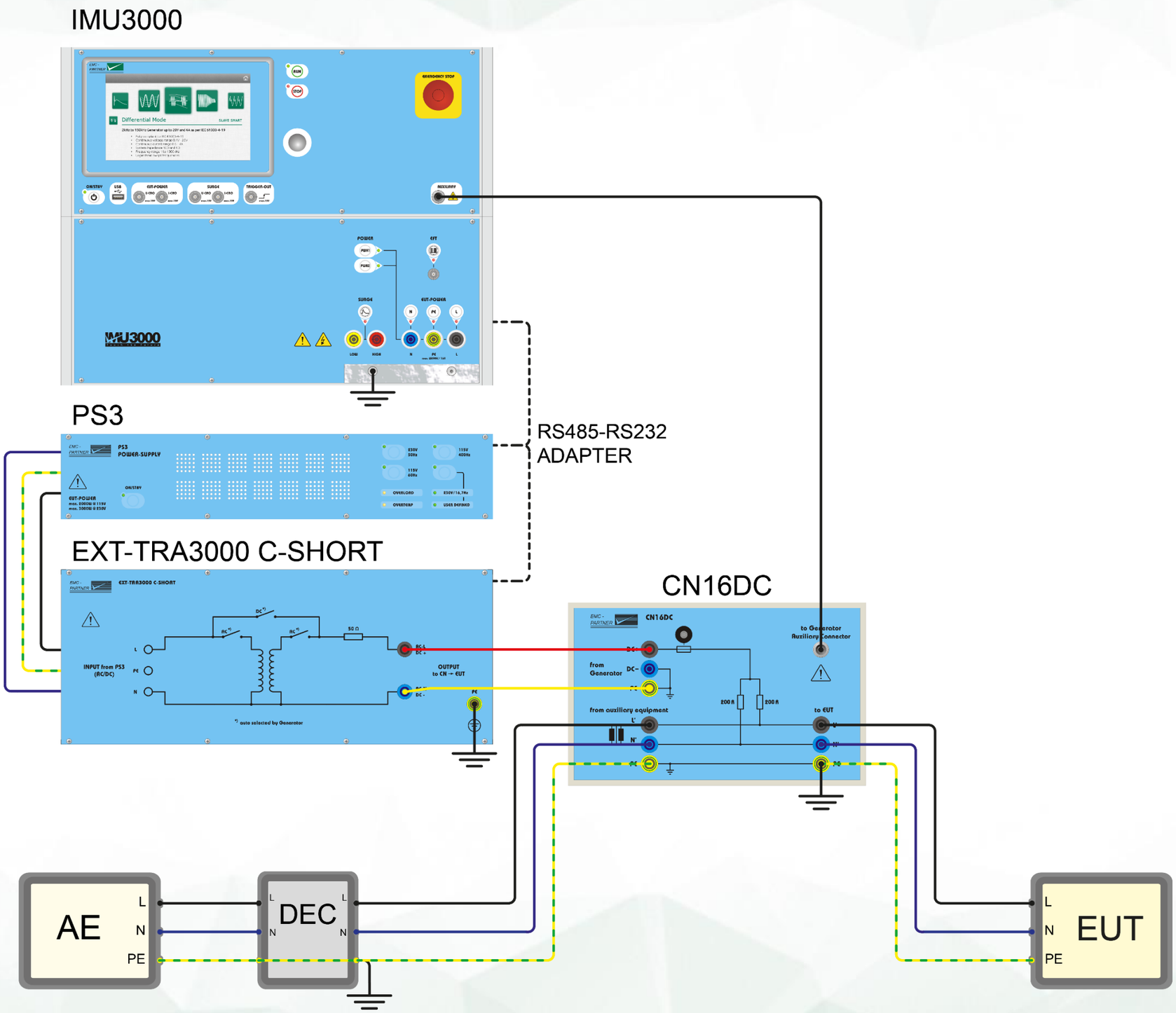

Decoupler could be DN16-1P6, DN16-1P16 or another suitable device calibrated according to standard.

1.9.11. Common mode: IMU3000 C, EXT-TRA3000 C-SHORT, PS3, CN16DC, DN16-1P16 (or DN16-1P6), test setup up to 300V

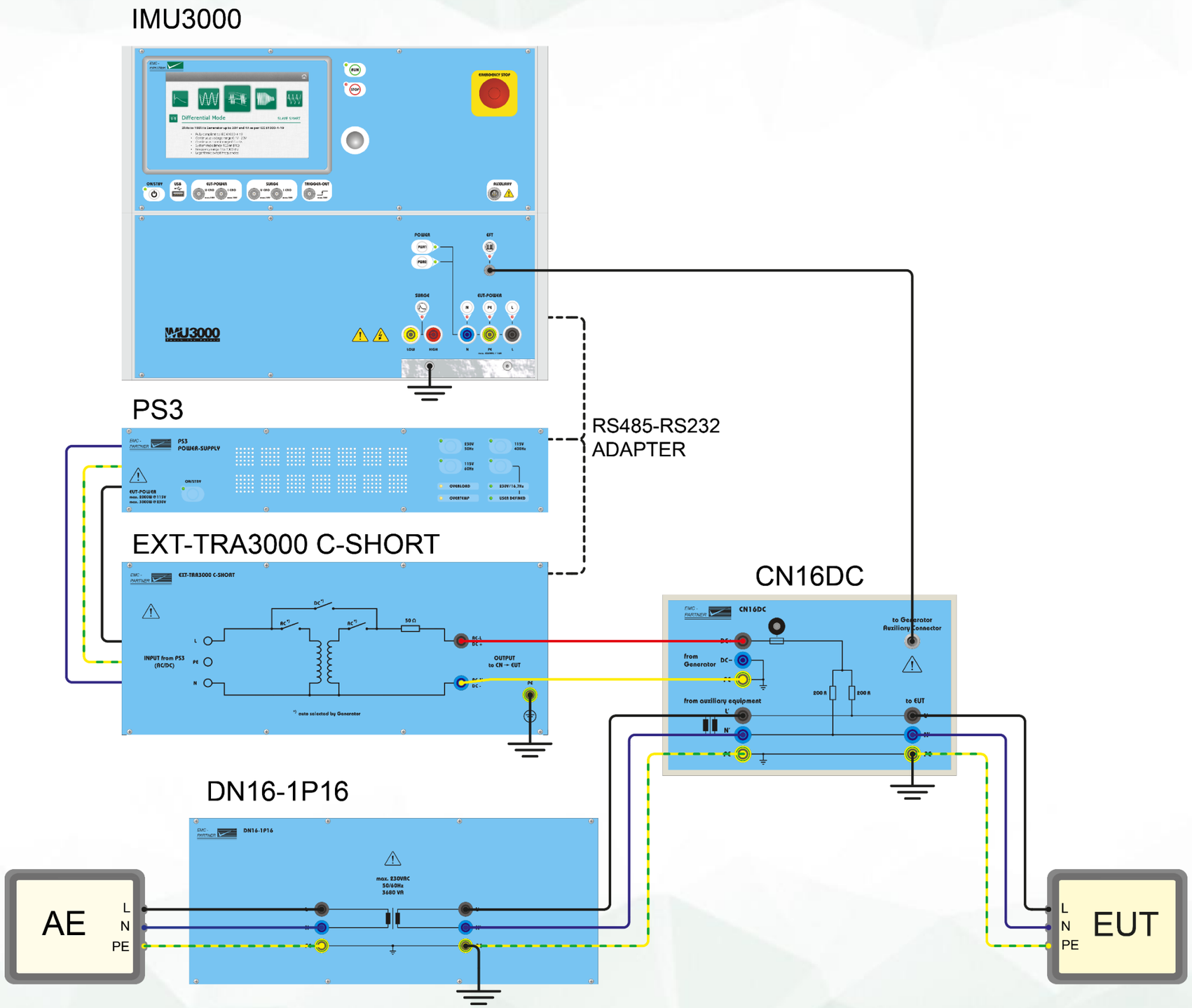

DN16-1P6 and DN16-1P16: common mode decoupling > 60 dB, insulation > 1 kV.

1.9.12. Common mode: IMU3000 C, EXT-TRA3000 C-SHORT, PS3, CN16T, test setup up to 300V

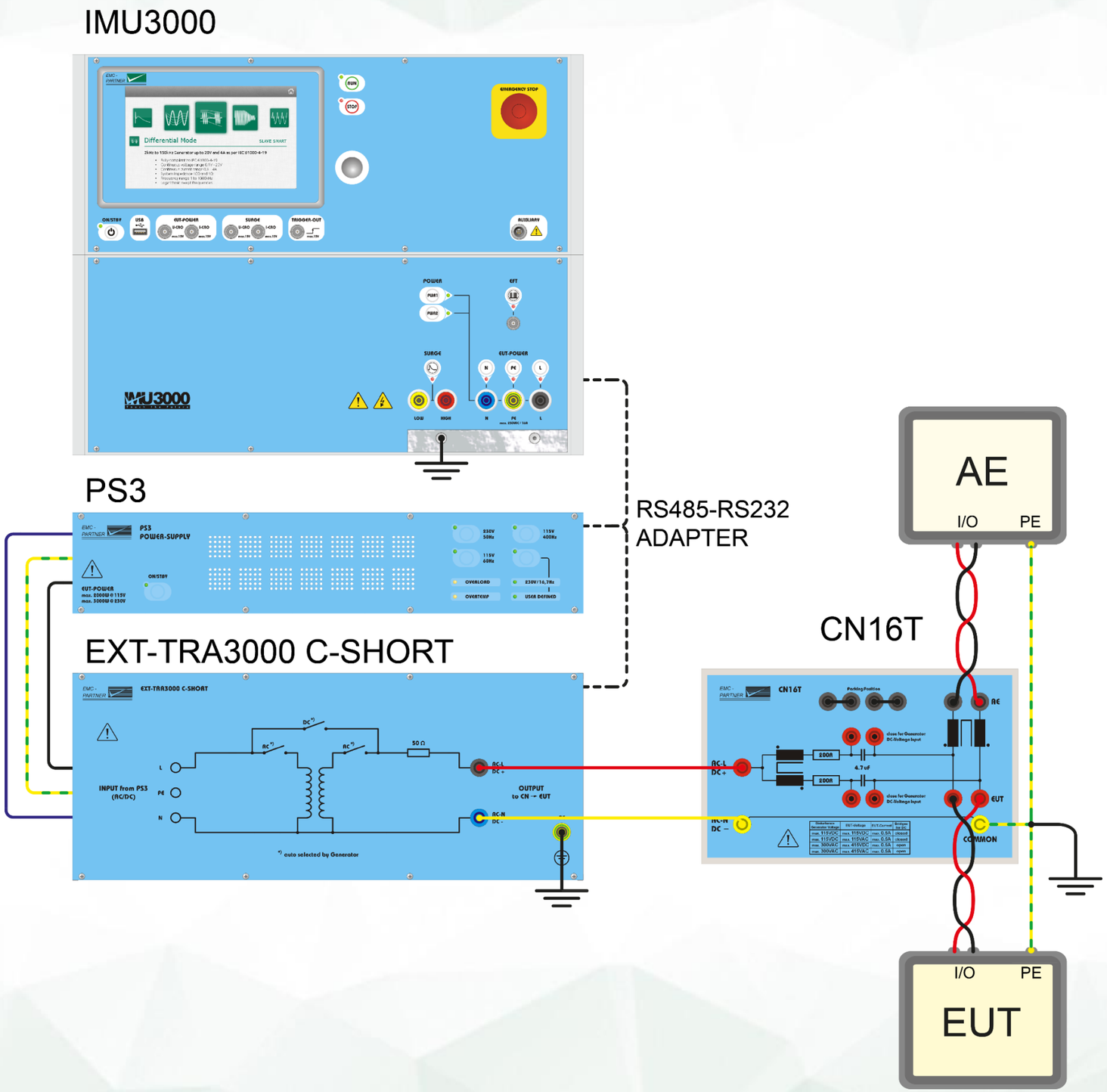

Capacitors have to be bypassed when coupling DC test signal.

IEC 61000-4-19
Edition 1.0 / 2014

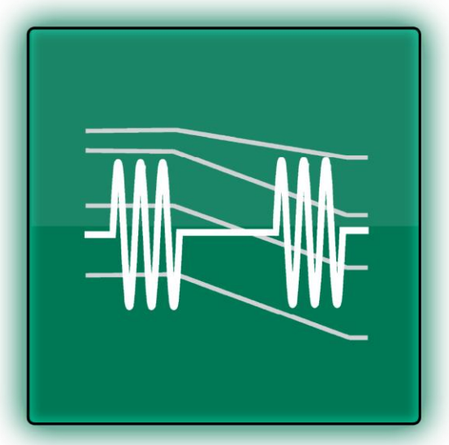

Differential mode disturbances 2 kHz - 150 kHz:
full compliant system for both voltage and current tests

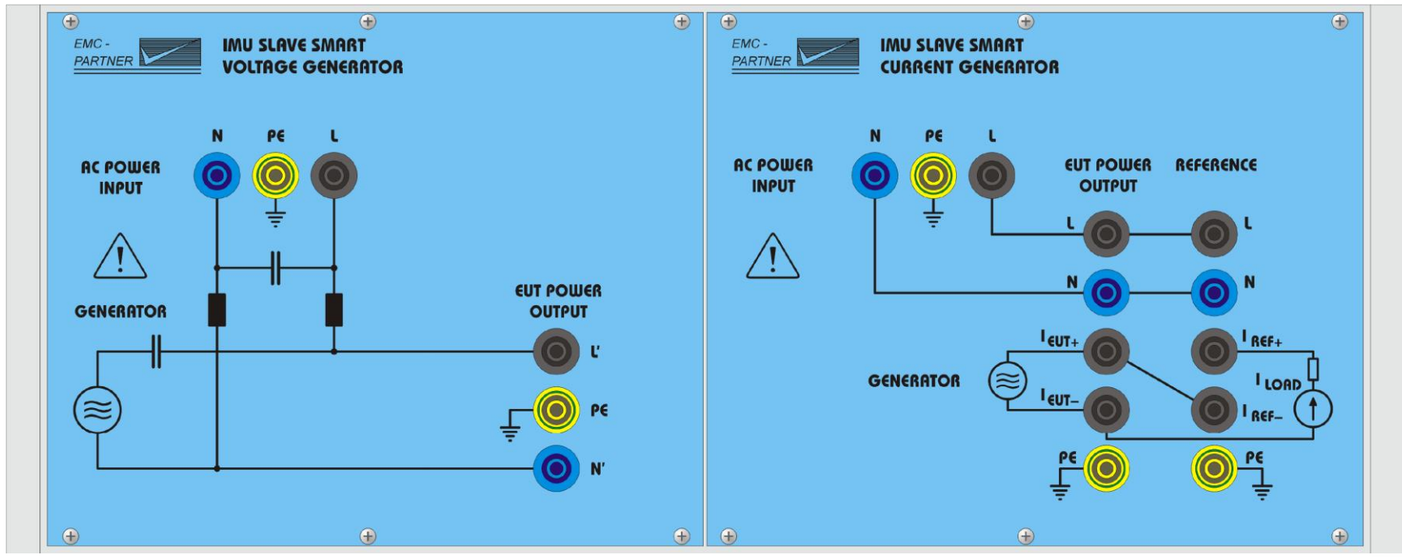

1.10.1. Differential mode: IMU3000 (any model), IMU SLAVE SMART I1V1, (optional PS3), calibration setup for voltage module

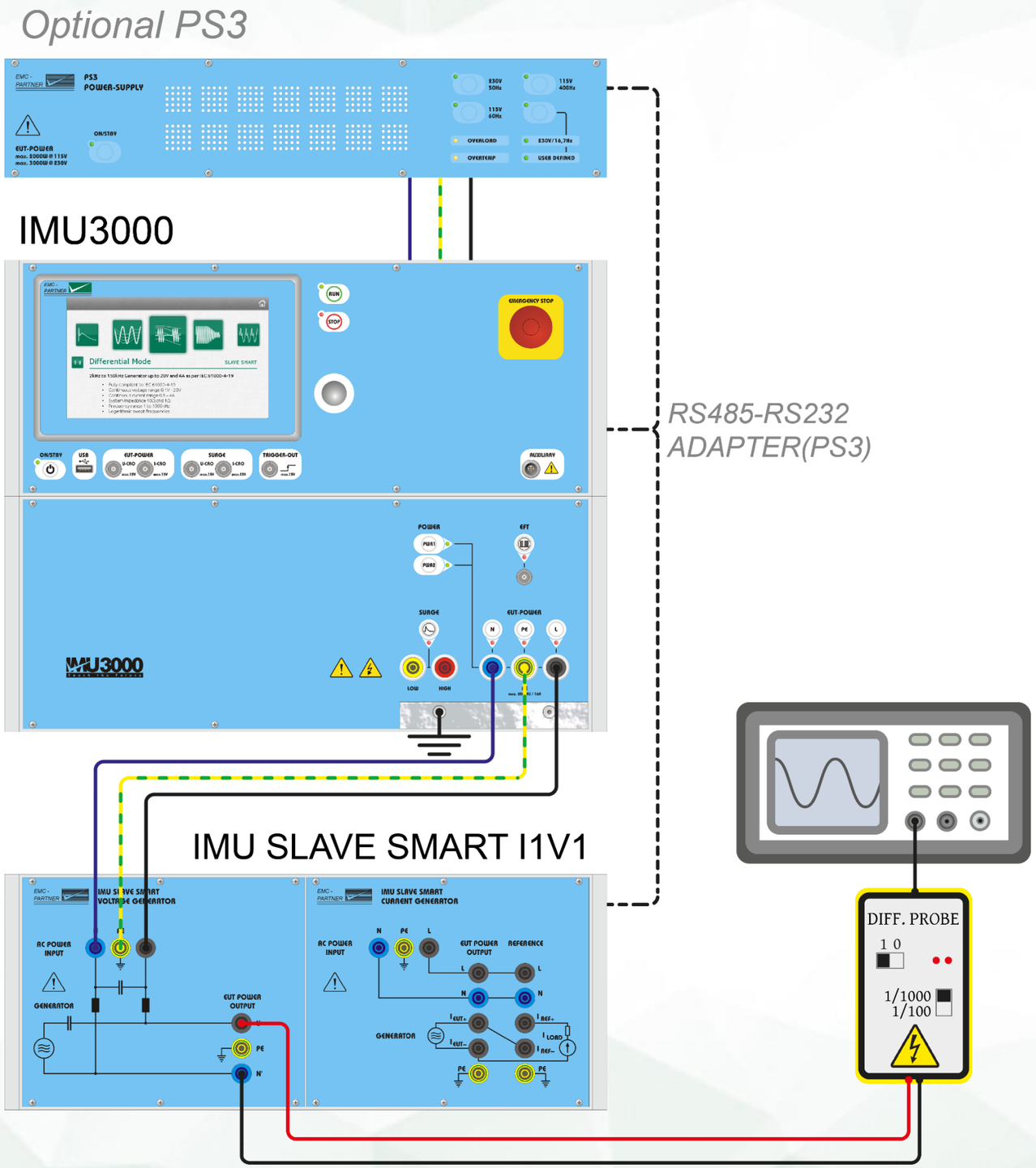

Differential mode voltage has to be measured up to 150 kHz, all test levels.

1.10.2. Differential mode: IMU3000 (any model), IMU SLAVE SMART I1V1, (optional PS3), calibration setup for CDN from voltage module

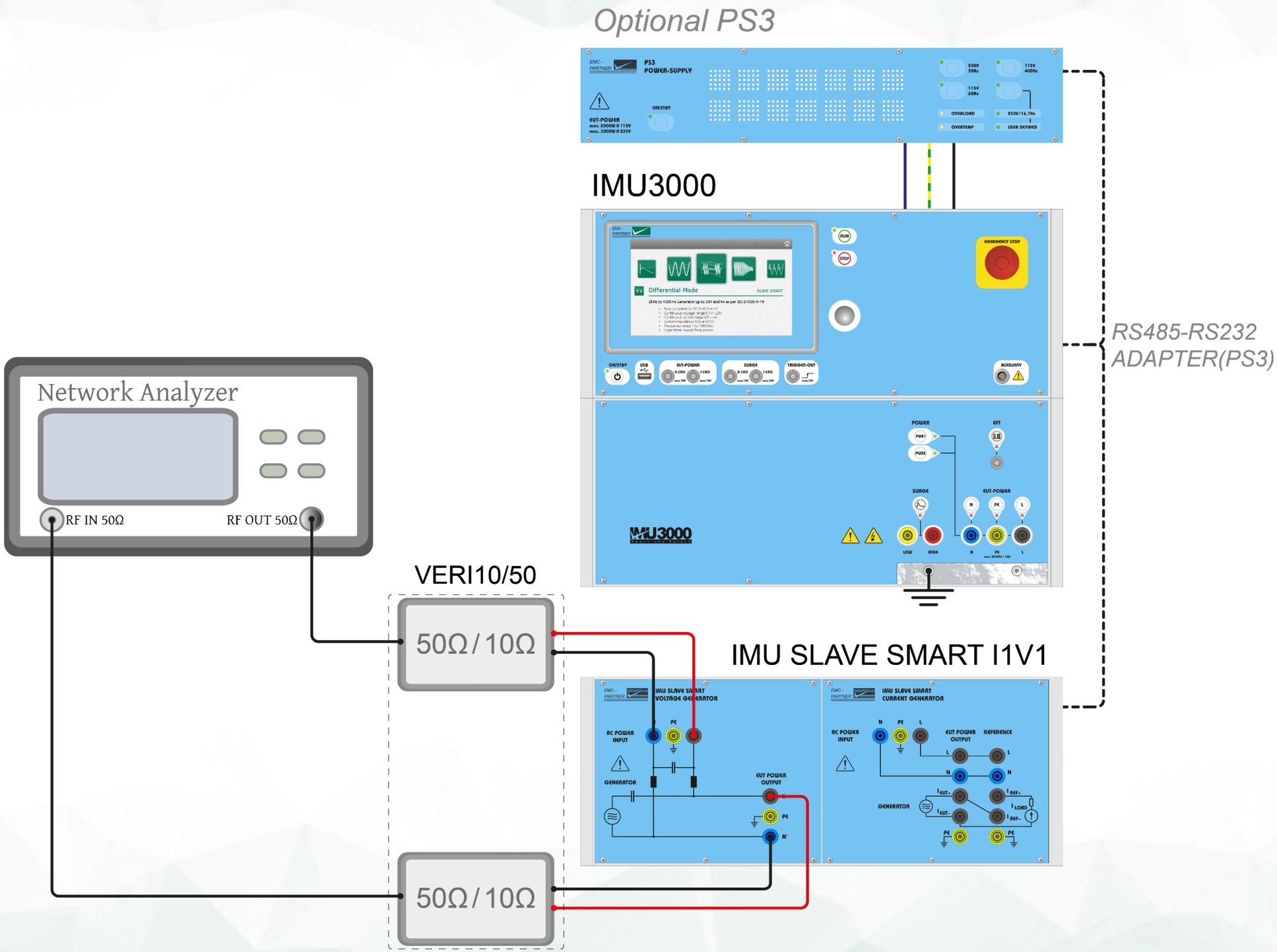

An included 10 Ω load as described in the standard is automatically switched on the generator port.

1.10.3. Differential mode: IMU3000 (any model), IMU SLAVE SMART I1V1, (optional PS3), voltage test setup

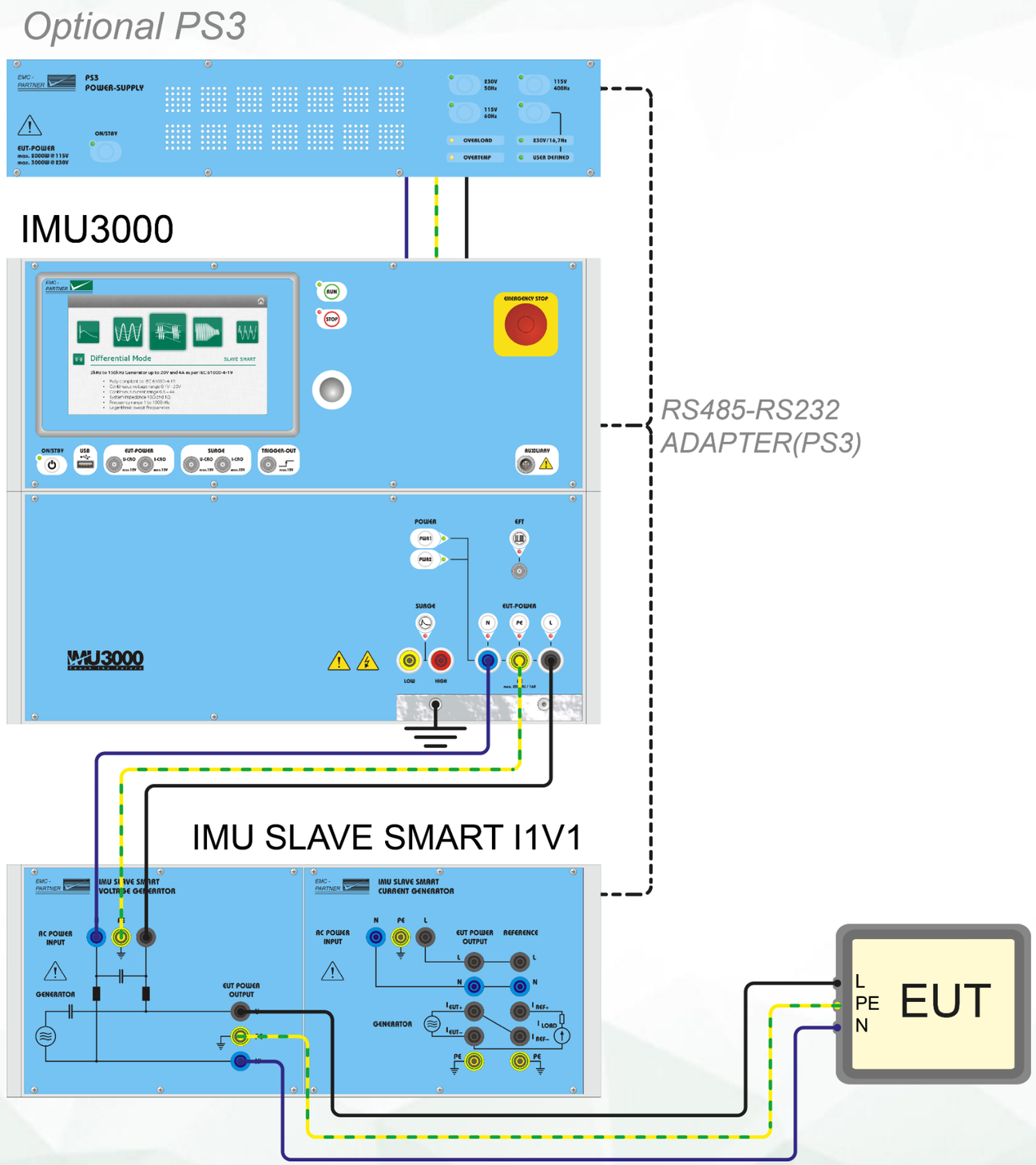

Voltage test applies to any EUT excepting electricity meters and similar equipment (low input impedance).

1.10.4. Differential mode: IMU3000 (any model), IMU SLAVE SMART I1V1, (optional PS3), calibration setup for current module

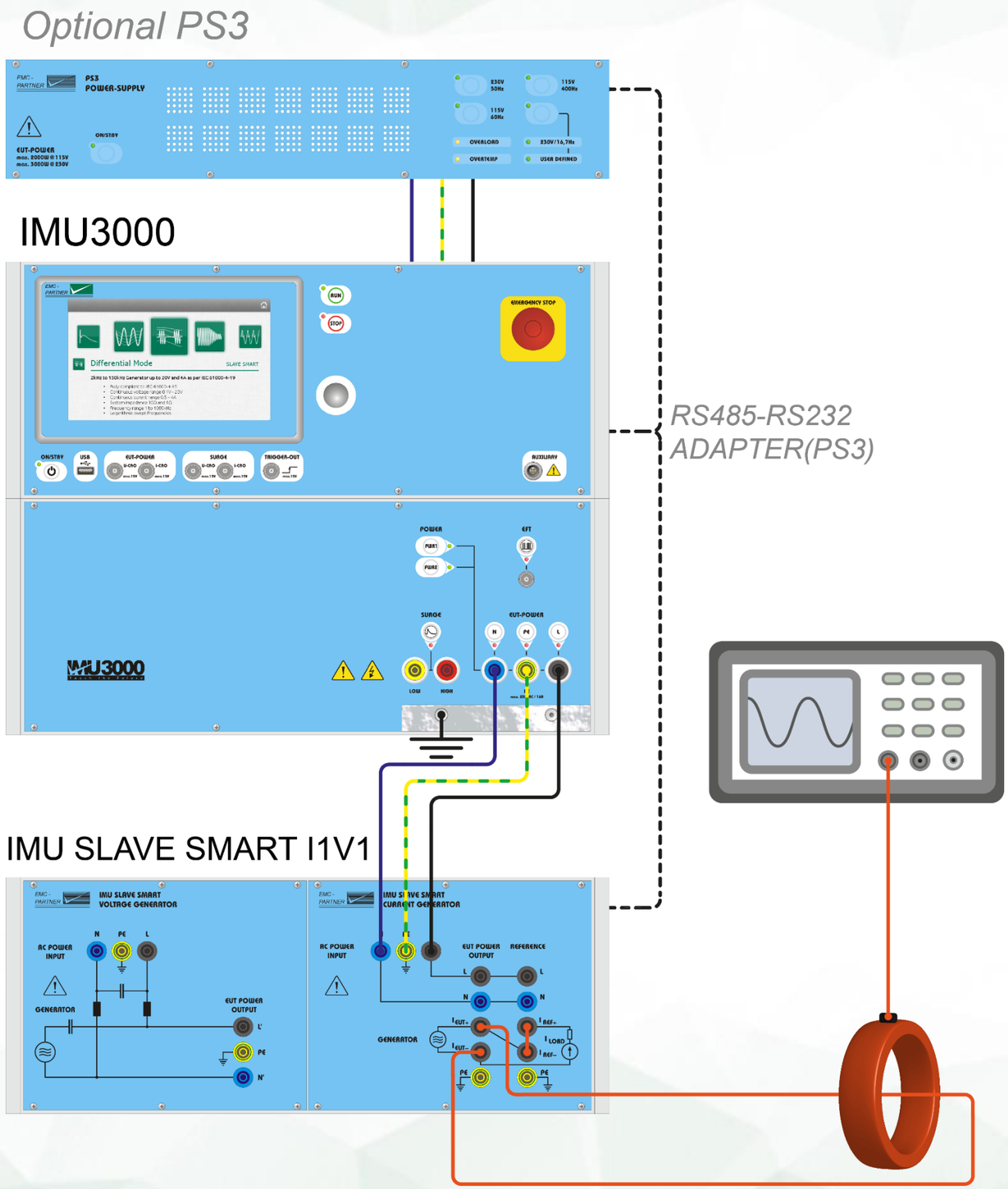

Differential mode current has to be measured up to 150 kHz, all test levels.

1.10.5. Differential mode: IMU3000 (any model), IMU SLAVE SMART I1V1, (optional PS3), current test setup without reference electricity meter

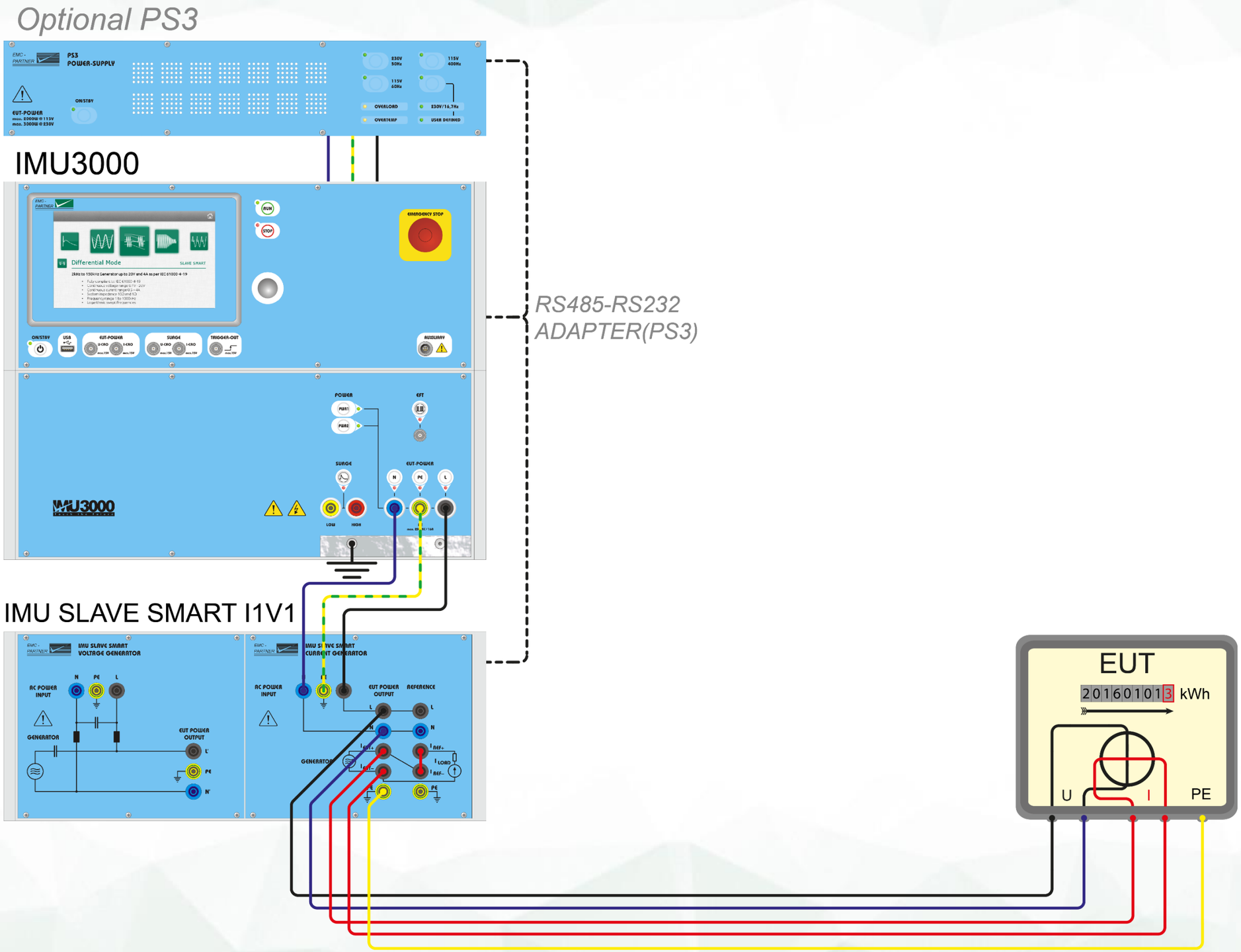

For three phase electricity meters, the test is performed phase by phase.

1.10.6. Differential mode: IMU3000 (any model), IMU SLAVE SMART I1V1, (optional PS3), current test setup with reference electricity meter

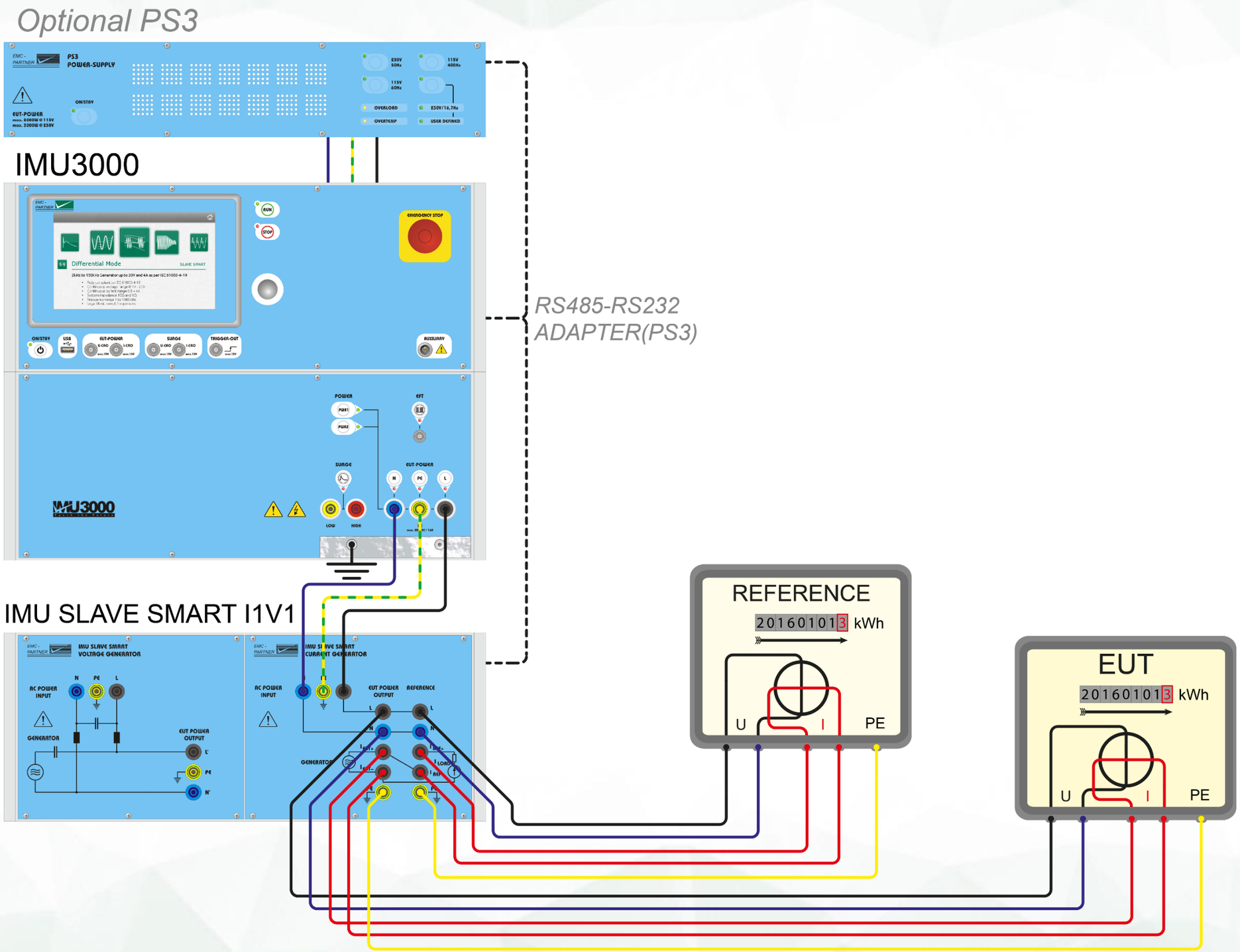

For three phase electricity meters, the test is performed phase by phase.

IEC 61000-4-29
Edition 1.0 / 2000

DC dips and interruptions: power sources are part of the test system, must be calibrated together with the generator

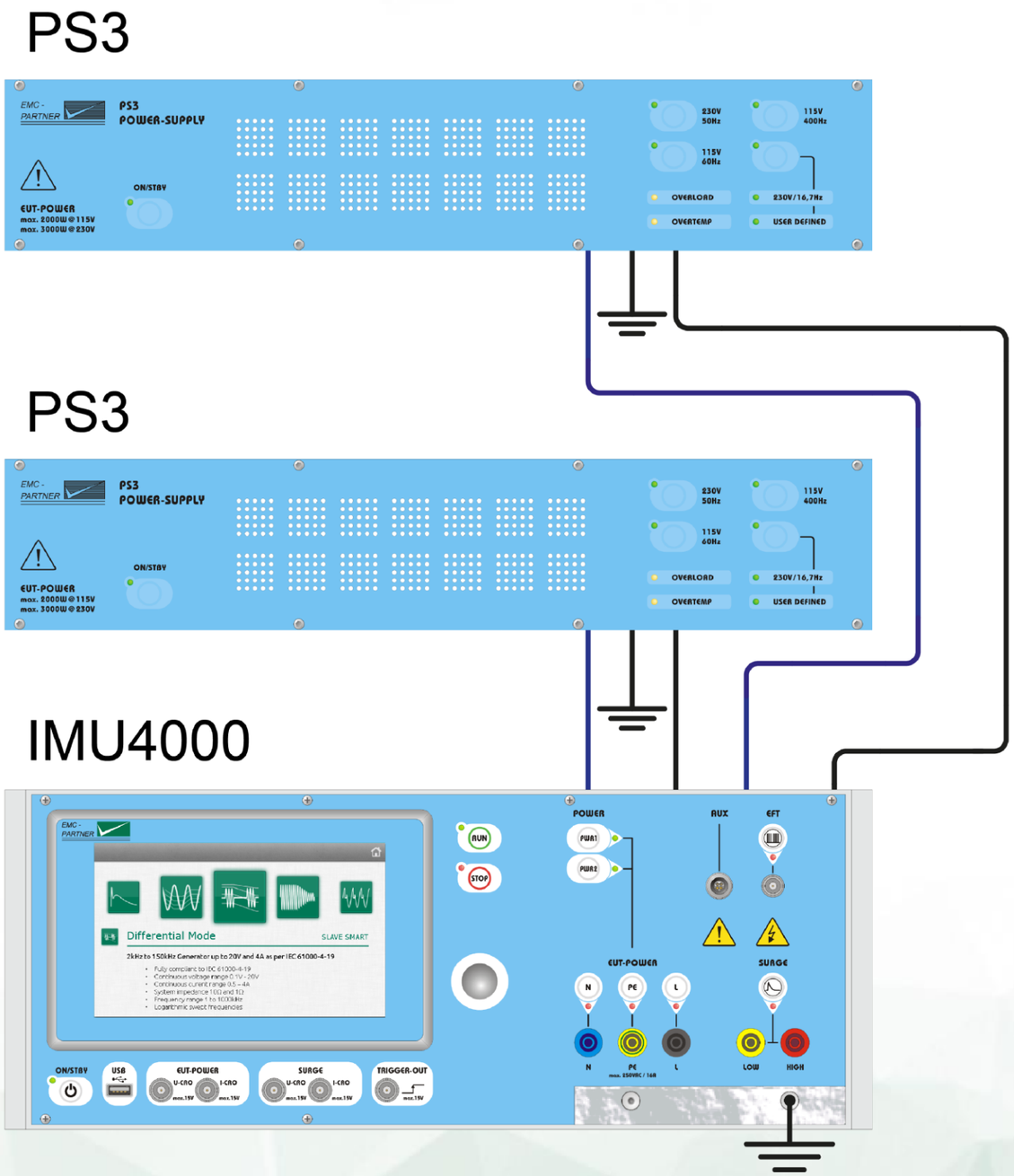

1.11.1. DC interruptions: IMU3000 D (+ EXT-TRA3000 D-29I), 1 x PS3 (+ 1 x RS232 – RS485 adapter), inrush current calibration setup

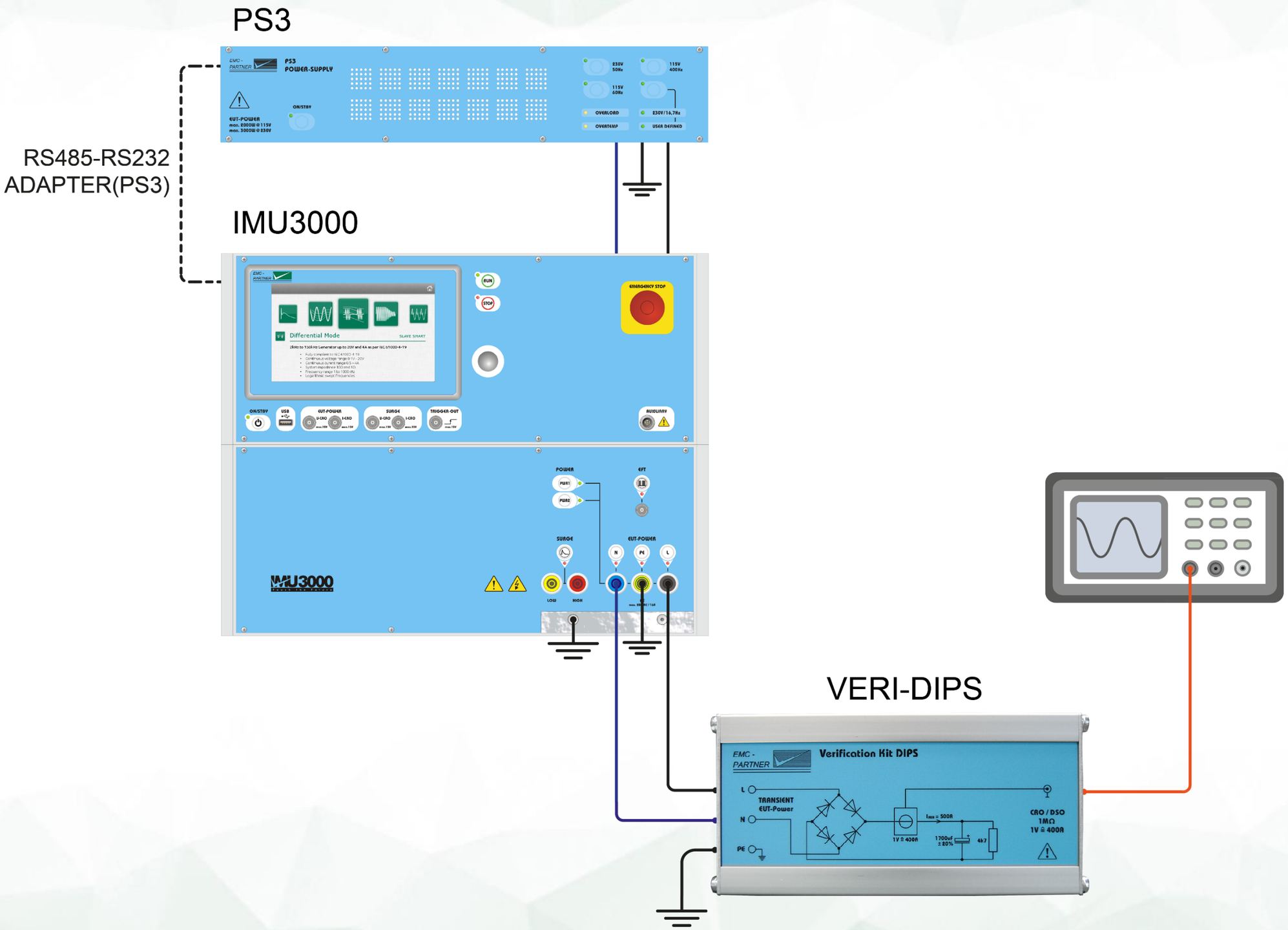

Inrush current has to be measured into a 1700 µF capacitor.

1.11.2. DC interruptions: IMU3000 D (+ EXT-TRA3000 D-29I), 1 x PS3 (+ 1 x RS232 – RS485 adapter), switch time calibration setup

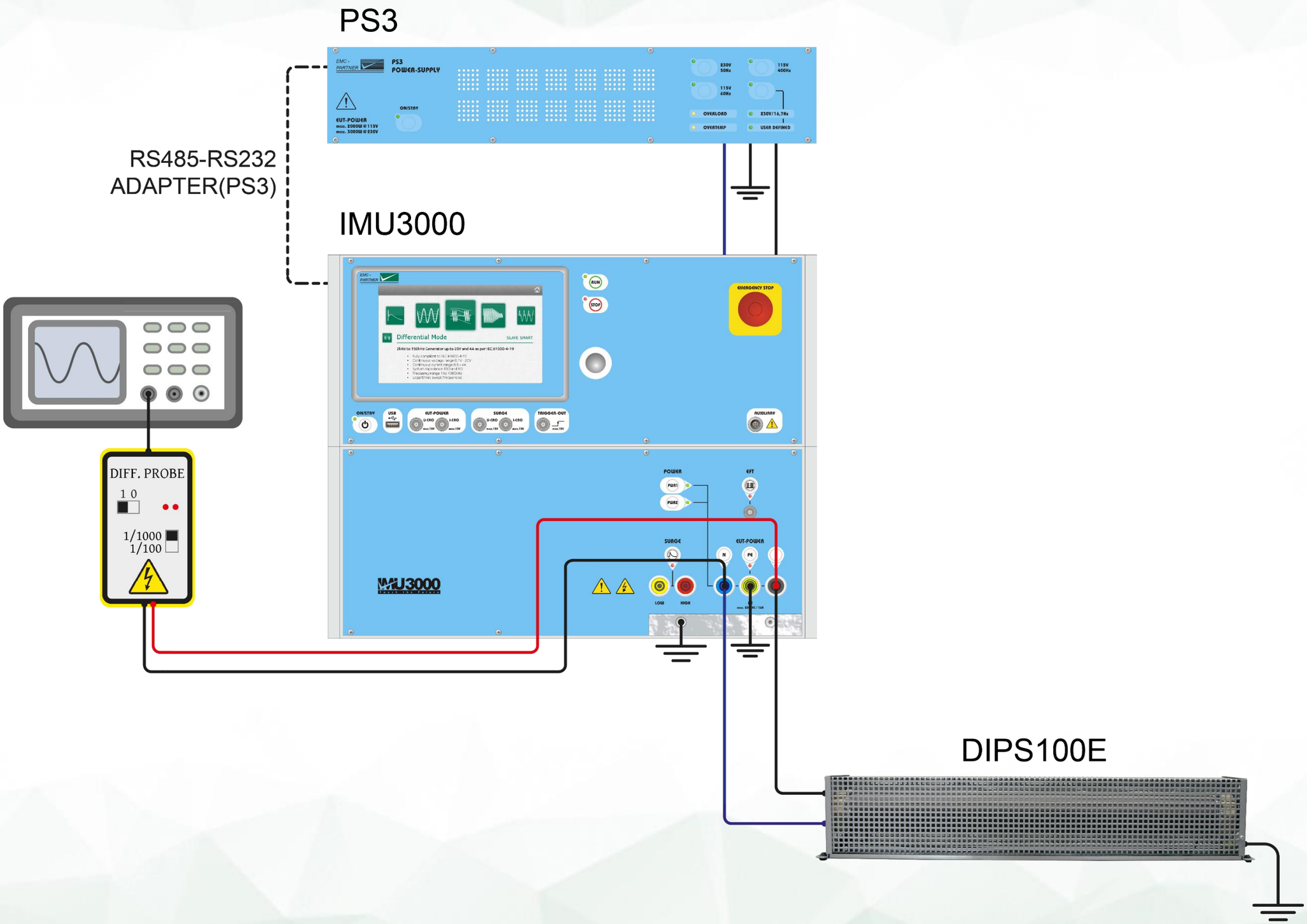

Switching time has to be measured into a 100 Ω load: < 50 µs.

1.11.3. DC interruptions: IMU3000 D (+ EXT-TRA3000 D-29I), 1 x PS3 (+ 1 x RS232 – RS485 adapter), test setup

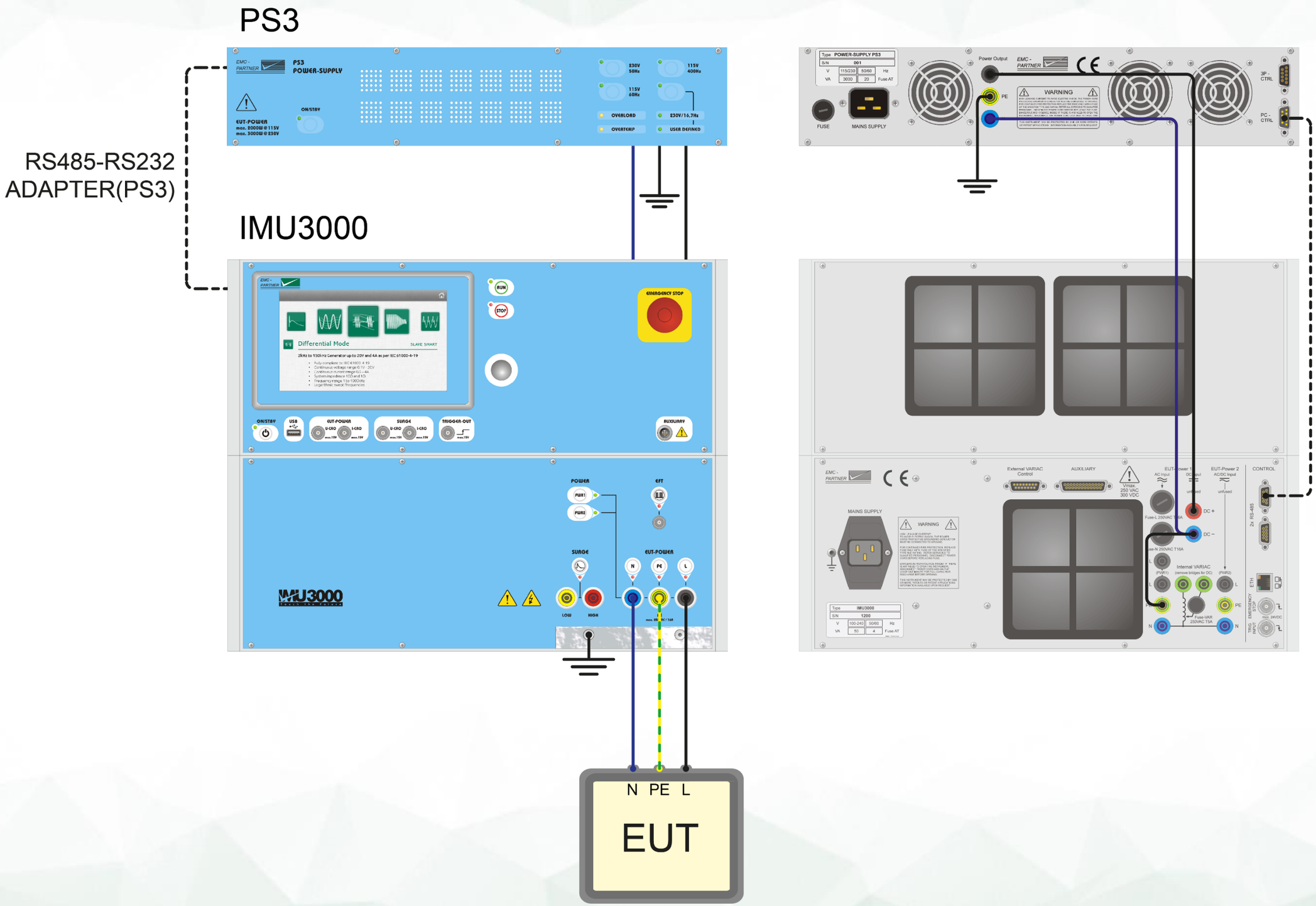

Interruption test requires 1 x PS3 power source (switch to high impedance). Power source is part of the test system, cannot be calibrated separately.

1.11.4. DC dips: IMU3000 D (+ EXT-TRA3000 D-29D), 2 x PS3 (+ 2 x RS232 – RS485 adapter), inrush current calibration setup

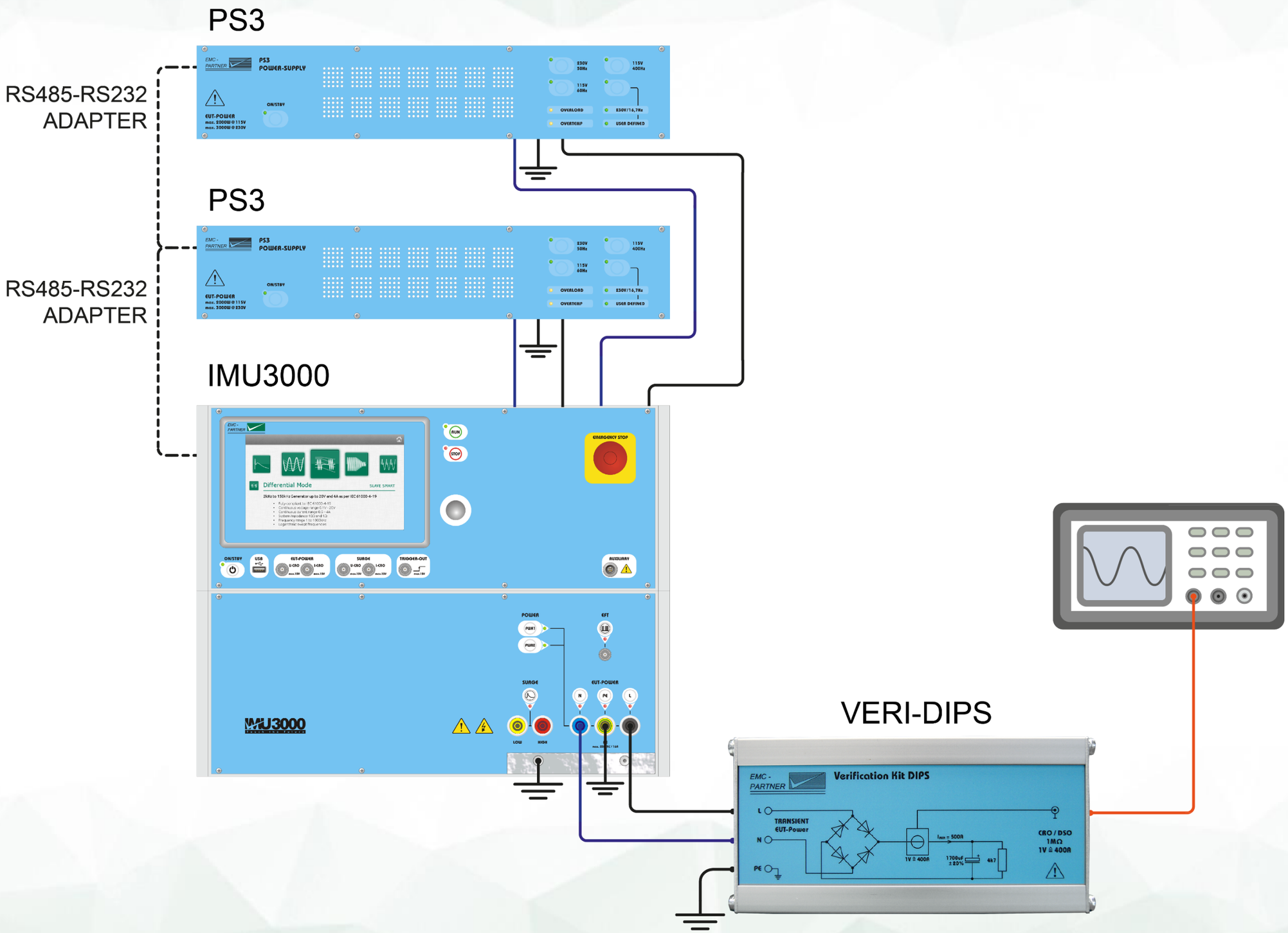

Inrush current has to be measured into a 1700 µF capacitor.

1.11.5. DC dips: IMU3000 D (+ EXT-TRA3000 D-29D), 2 x PS3 (+ 2 x RS232 – RS485 adapter), switch time calibration setup

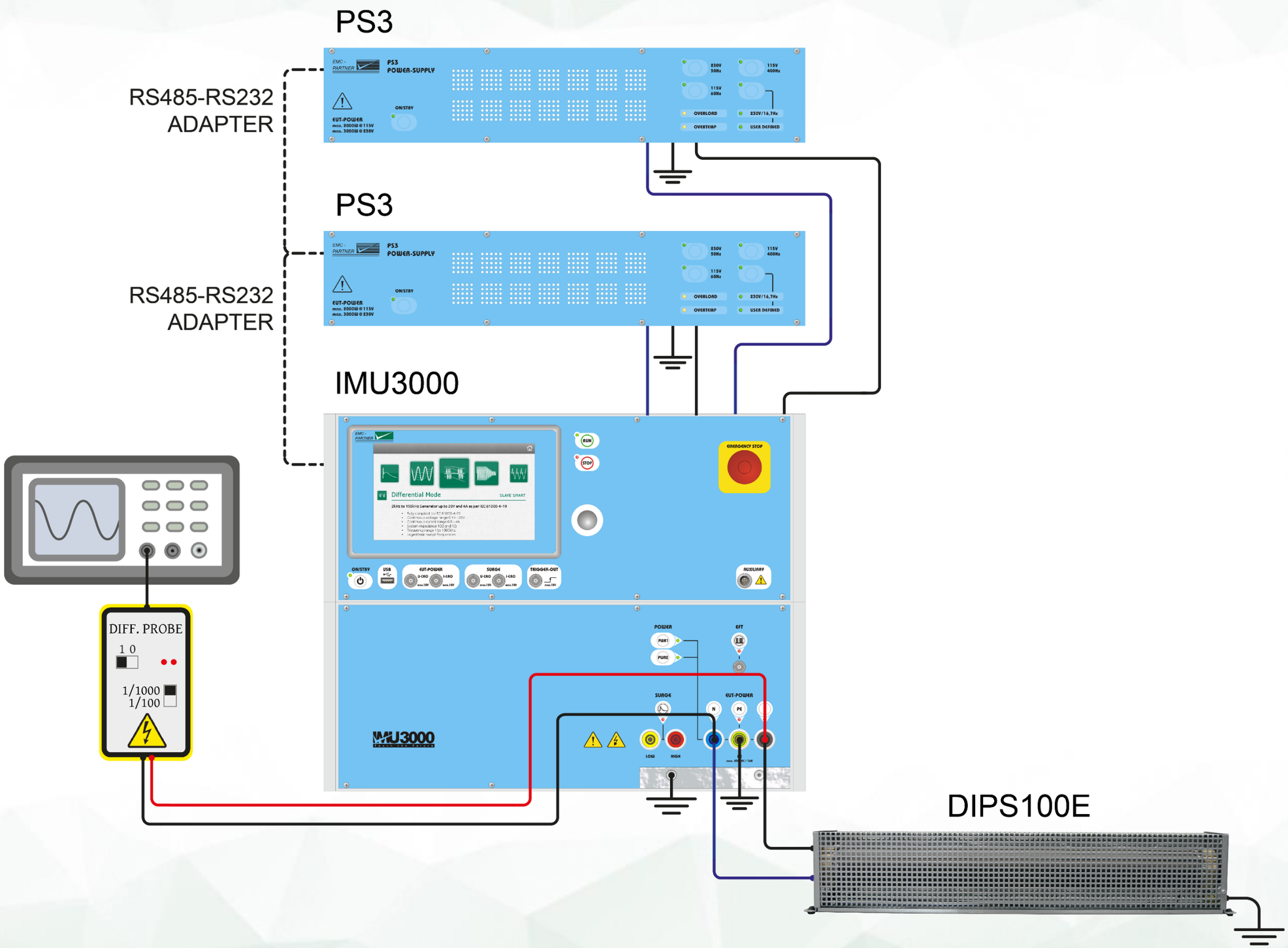

Switching time has to be measured into a 100 Ω load: < 50 µs.

1.11.6. DC dips: IMU3000 D (+ EXT-TRA3000 D-29D), 2 x PS3 (+ 2 x RS232 – RS485 adapter), test setup

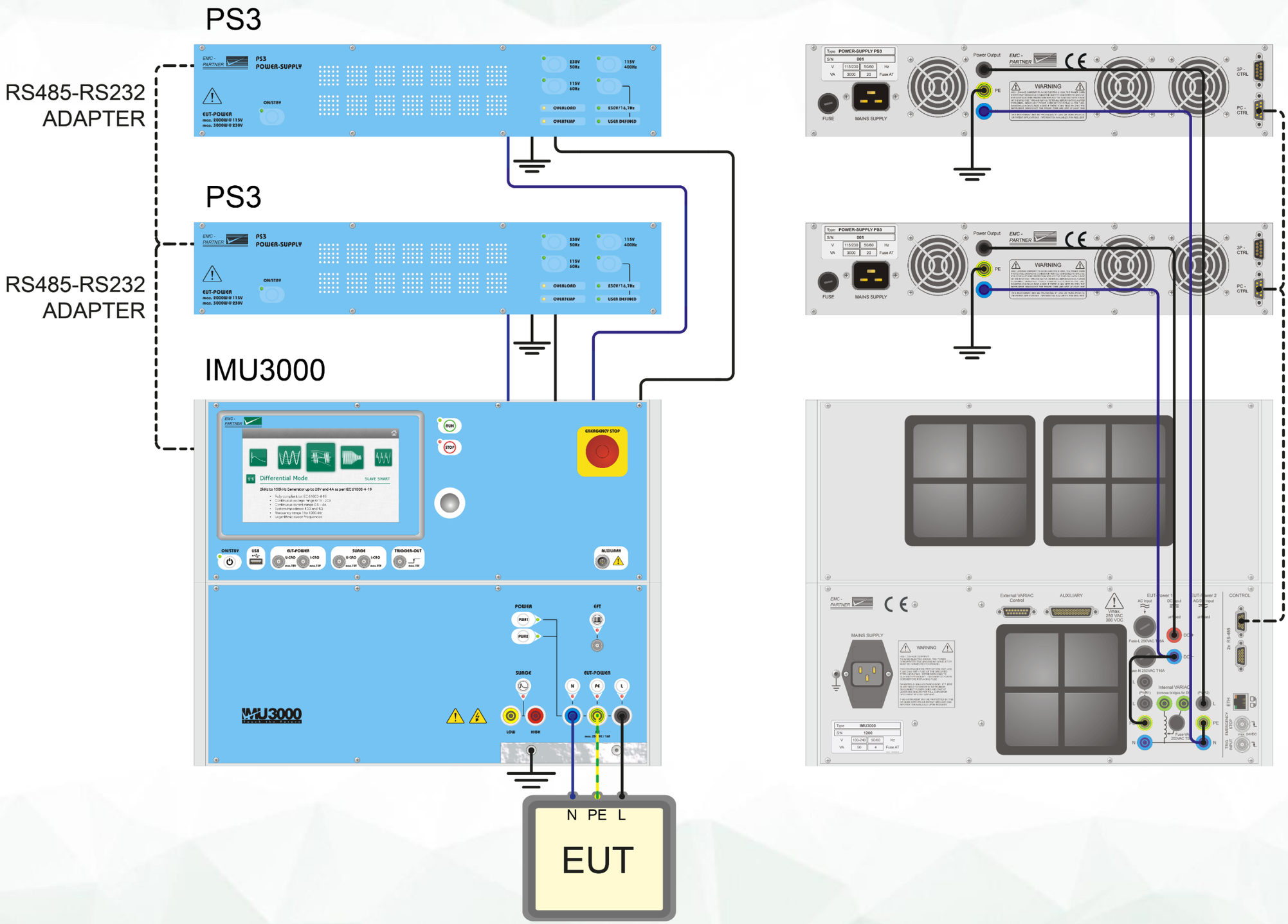

Dip test requires 2 x PS3 power sources. Power sources are part of the test system, cannot be calibrated separately.

EMC - PARTNER
TEMA 3000
TEST MANAGER FOR THE FUTURE

www.emc-partner.com

sales@emc-partner.ch